Data sheet | Item number: 787-916

capacitive buffer module; 24 VDC input voltage; 24 VDC output voltage; 40 A output current; Buffer time: 0.3 … 6.6 s

www.wago.com/787-916



RoHS ✓ Compliant

BOMcheck.net

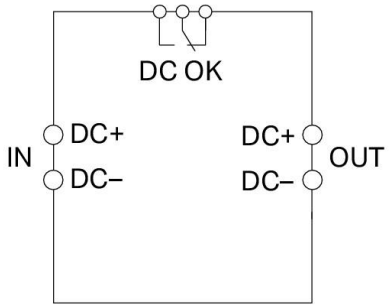

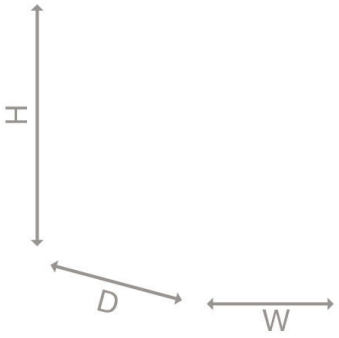

Item description

Features:

- Capacitive buffer module bridges short duration voltage drops or load fluctuations.
- Internal diode between input and output enables operation with a decoupled output.
- Potential-free contact for charge condition monitoring

Data

Technical data

Subject to changes. Please also observe the further product documentation!

WAGO Kontakttechnik GmbH & Co. KG
Hansastr. 27
32423 Minden
Phone: +49571 887-0 | Fax: +49571 887-169
Email: info.de@wago.com | Web: www.wago.com

Do you have any questions about our products?
We are always happy to take your call at +49 (571) 887-44222.

Input

Nominal input voltage $U_{i\ nom}$	DC 24 V
Input voltage range	DC 23 … 30 V
Nominal mains frequency range	0 Hz
Input current I_i	≤ 0.06 A (No load); ≤ 0.8 A (Charging); ≤ 40.8 A

Output

Nominal output voltage $U_{o\ nom}$	DC 24 V
Output voltage range	U_i – 0.5 VDC (mains operation; I_o = 20 A); U_i - 0.8 VDC (mains operation; I_o = 40 A); 20 … 29 VDC (buffer mode)
Nominal output current $I_{o\ nom}$	40 A

Energy storage system

Buffer time	0.3 … 6.6 sdepends on load current and temperature
Switch-on threshold (typ.)	DC 22 V
Nominal voltage	32.4 V
Charging time (typ.)	2.5 min

Signaling and communication

Signaling	1 x LED DC OK (green) 1 x UPS LED (yellow) 1 x Warning LED (red) 1 x Isolated relay contact (max. 30 VDC; 1 A)
Operation status indicator	Green LED (DC OK) Yellow LED (buffer mode/charging) Red LED (warning)

Efficiency/power losses

Power loss P_l	≤ 1.9 W (Operation without decoupled output); ≤ 11.5 W (Operation with uncoupled output; I_o = 20 A); ≤ 33.5 W (Operation with uncoupled output; I_o = 40 A)
Efficiency (typ.)	96.5 %

WAGO Kontakttechnik GmbH & Co. KG
Hansastr. 27
32423 Minden
Phone: +49571 887-0 | Fax: +49571 887-169
Email: info.de@wago.com | Web: www.wago.com

Circuit protection

Internal fuse	No
Recommended backup fusing	T 40 A

Safety and protection

Isolation voltage (connectors – housing)	DC 0.5 kV
Protection class	III
Protection type	IP20 (per EN 60529)
Reverse voltage protection	yes
Pollution degree	2
Parallel operation	No
Series operation	No
Service life	74,000 h (25 °C; I_a = 40 A); 28,200 h (40 °C; I_a = 40 A)

Connection data

Connection type (1)	Input/Output
Connection technology	Push-in CAGE CLAMP®
WAGO Connector	WAGO 2636 Series
Solid conductor	0.75 … 16 mm² / 18 … 4 AWG
Fine-stranded conductor	0.75 … 25 mm² / 18 … 4 AWG
Fine-stranded conductor; with insulated ferrule	0.75 … 16 mm²
Fine-stranded conductor; with uninsulated ferrule	0.75 … 16 mm²
Strip length	18 … 20 mm / 0.71 … 0.79 inch
Connection type 2	Signaling
Connection technology 2	CAGE CLAMP®
WAGO Connector 2	WAGO 741 Series
Solid conductor 2	0.08 … 2.5 mm² / 28 … 12 AWG
Fine-stranded conductor 2	0.08 … 2.5 mm² / 28 … 12 AWG
Fine-stranded conductor; with insulated ferrule 2	0.25 … 1.5 mm² /
Fine-stranded conductor; with uninsulated ferrule 2	0.25 … 1.5 mm² /
Strip length 2	5 … 6 mm / 0.2 … 0.24 inch

Physical data

Width	68 mm / 2.677 inch

Subject to changes. Please also observe the further product documentation!

WAGO Kontakttechnik GmbH & Co. KG
Hansastr. 27
32423 Minden
Phone: +49571 887-0 | Fax: +49571 887-169
Email: info.de@wago.com | Web: www.wago.com

Do you have any questions about our products?
We are always happy to take your call at +49 (571) 887-44222.

Height	181 mm / 7.126 inch
Depth from upper edge of DIN-rail	162 mm / 6.38 inch

Mechanical data

Mounting type	DIN-35 rail

Material data

Weight	900 g

Environmental requirements

Surrounding air temperature (operation)	-10 … 50 °C
Surrounding air temperature (storage)	-10 … 60 °C
Relative humidity	5 … 95 % (no condensation permissible)
Pollution degree	2

Standards and specifications

Conformity marking	CE
Standards/Specifications	EN 62368-1; EN 61000-6-2; EN 61000-6-3; CSA* (*pending)

Commercial data

Packaging type	BOX
Country of origin	DE
GTIN	4055144035148
Customs tariff number	85044082900

Approvals / Certificates

Country specific Approvals

Logo	Approval	Additional Approval Text	Certificate name
	CSA CSA Group	CAN/CSA-C22.2 No. 62368-1	70216154
	EAC Brjansker Zertifizierungsstelle	TP TC 004/2011,TP TC 020/2011	EAC RU C-DE.AM02.B.00089_19

Subject to changes. Please also observe the further product documentation!

WAGO Kontakttechnik GmbH & Co. KG
Hansastr. 27
32423 Minden
Phone: +49571 887-0 | Fax: +49571 887-169
Email: info.de@wago.com | Web: www.wago.com

Do you have any questions about our products?
We are always happy to take your call at +49 (571) 887-44222.

Downloads

Documentation

Bid Text

787-916 X81 - Datei	12. 7. 2019	xml 6.8 kB	Download
787-916 docx - Datei	12. 7. 2019	docx 23.2 kB	Download

Instruction Leaflet

Capacitive Buffer module DC 24 V, 40 A	13. 6. 2019	pdf 2.2 MB	Download

Additional Information

Disposal; Electrical and electronic equipment, Packaging	V 1.0.0	pdf 265.8 kB	Download

Environmental Product Compliance

Compliance Search

Environmental Product Compliance 787-916 capacitive buffer module; 24 VDC input voltage; 24 VDC output voltage; 40 A output current; Buffer time: 0.3 … 6.6 s	URL	Download

Installation Notes

WAGO Kontakttechnik GmbH & Co. KG
Hansastr. 27
32423 Minden
Phone: +49571 887-0 | Fax: +49571 887-169
Email: info.de@wago.com | Web: www.wago.com