Data sheet | Item number: 750-843

Controller ETHERNET; 1st Generation; ECO; light gray

www.wago.com/750-843

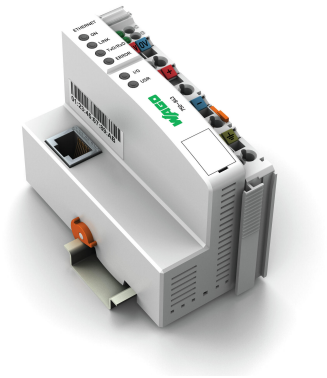

RoHS ✓ Compliant

BOMcheck.net

Color:

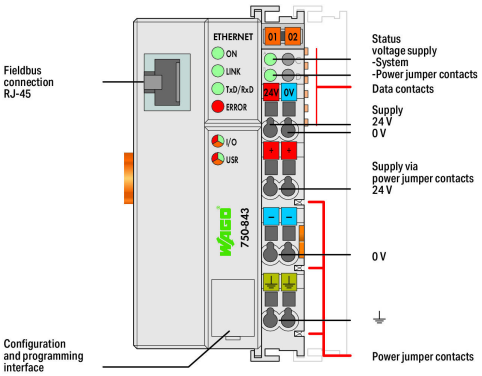

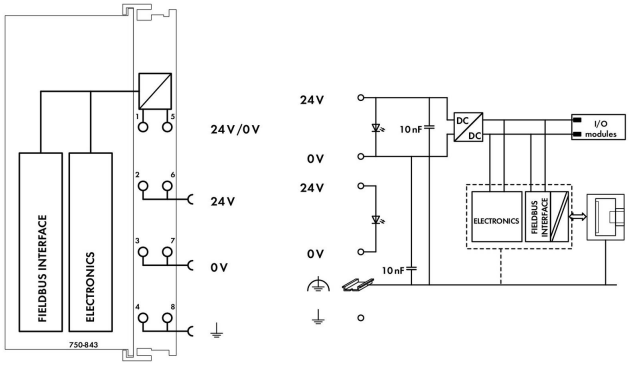

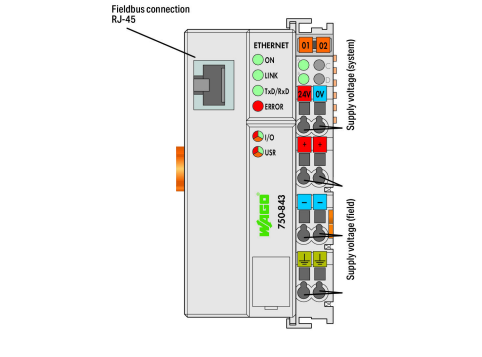

Item description

The ETHERNET Controller combines control functionality, I/O interface and ETHERNET in one device.

Application programming is IEC 61131-3 compliant. Function blocks allow both clients and servers to be programmed via socket APIs for all transport protocols (e.g., TCP, UDP).

Features and applications:

- Decentralized control to optimize support for a PLC or PC
- Devide complex applications into individually testable units

Subject to changes. Please also observe the further product documentation!

WAGO Kontakttechnik GmbH & Co. KG
Hansastr. 27
32423 Minden
Phone: +49571 887-0 | Fax: +49571 887-169
Email: info.de@wago.com | Web: www.wago.com

Do you have any questions about our products?
We are always happy to take your call at +49 (571) 887-44222.

- Programmable fault response in the event of fieldbus failure
- Signal pre-processing to reduce fieldbus transmissions
- Directly control peripheral equipment for faster system response times
- Stand-alone, compact controller

Data

Technical data

Communication	Modbus (TCP, UDP) Ethernet
ETHERNET protocols	HTTP BootP
Visualization	without
CPU	16 bits
Programming languages per IEC 61131-3	Instruction List (IL) Ladder Diagram (LD) Function Block Diagram (FBD), Continuous Function Chart (CFC) Structured Text (ST) Sequential Function Chart (SFC)
Programming environment	WAGO-I/O-PRO V2.3 (based on CODESYS V2.3)
Configuration options	WAGO-I/O-CHECK
Cycle time	< 3 ms for 1000 bit instructions/ 256 digital I/O
Baud rate	-
Bus segment length (max.)	100 m
Transmission medium (communication/fieldbus)	Twisted Pair S-UTP; 100 Ω; Cat. 5
Program memory	64 kByte
Data memory	64 kByte
Non-volatile software memory	8 Kbytes
Memory for fieldbus input variables (max.)	512 Byte
Memory for fieldbus output variables (max.)	512 Byte
Number of modules per node (max.)	64
Input and output (fieldbus) process image (max.)	512 Byte/512 Byte
Indicators	LED (ON, LINK, TxD/RxD) green: Fieldbus initialization, network connection, data exchange; LED (ERROR) red: Fieldbus error; LED (I /O, USR) red/green/orange: Local data bus status, status programmable by user; LED (A, B) green: System power supply status, field supply
Supply voltage (system)	24 VDC (-25 … +30 %); via pluggable connector (CAGE CLAMP® connection)
Input current (typ.) at nominal load (24 V)	500 mA

WAGO Kontakttechnik GmbH & Co. KG
Hansastr. 27
32423 Minden
Phone: +49571 887-0 | Fax: +49571 887-169
Email: info.de@wago.com | Web: www.wago.com

Power supply efficiency (typ.) at nominal load (24 V)	87 %
Power consumption (5 V system supply)	200 mA
Total current (system supply)	1,800 mA
Supply voltage (field)	24 VDC (-25 … +30 %); via power jumper contacts
Current carrying capacity (power jumper contacts)	10 A
Number of outgoing power jumper contacts	3
Isolation	500 V system/field

Connection data

Connection technology: communication/fieldbus	Modbus TCP/UDP: 1 x RJ-45
Connection technology: system supply	2 x CAGE CLAMP®
Connection technology: field supply	6 x CAGE CLAMP®
Connection type (1)	System/field supply
Solid conductor	0.08 … 2.5 mm² / 28 … 14 AWG
Fine-stranded conductor	0.08 … 2.5 mm² / 28 … 14 AWG
Strip length	8 … 9 mm / 0.31 … 0.35 inch
Connection technology: device configuration	1 x Male connector; 4-pole

Physical data

Width	50.5 mm / 1.988 inch
Height	100 mm / 3.937 inch
Depth	71.1 mm / 2.799 inch
Depth from upper edge of DIN-rail	63.9 mm / 2.516 inch

Mechanical data

Weight	197 g
Color	light gray
Housing material	Polycarbonate; polyamide 6.6
Conformity marking	CE

Environmental requirements

Surrounding air temperature (operation)	0 … 55 °C
Surrounding air temperature (storage)	-40 … 85 °C
Protection type	IP20
Pollution degree (5)	2 per IEC 61131-2
Operating altitude	without temperature derating: 0 … 2000 m; with temperature

Subject to changes. Please also observe the further product documentation!

WAGO Kontakttechnik GmbH & Co. KG
Hansastr. 27
32423 Minden
Phone: +49571 887-0 | Fax: +49571 887-169
Email: info.de@wago.com | Web: www.wago.com

Do you have any questions about our products?
We are always happy to take your call at +49 (571) 887-44222.

	derating: 2000 … 5000 m (0.5 K/100 m); 5000 m (max.)
Relative humidity (without condensation)	95 %
Mounting position	any
Mounting type	DIN-35 rail
Vibration resistance	4g per IEC 60068-2-6
Shock resistance	15g per IEC 60068-2-27
EMC immunity to interference	per EN 61000-6-2, marine applications
EMC emission of interference	per EN 61000-6-4, marine applications
Exposure to pollutants	Per IEC 60068-2-42 and IEC 60068-2-43
Fire load	3.168 MJ
Permissible H_2S contaminant concentration at a relative humidity 75 %	10 ppm
Permissible SO_2 contaminant concentration at a relative humidity 75 %	25 ppm

Commercial data

Product Group	15 (Remote I/O)
Packaging type	BOX
Country of origin	DE
GTIN	4045454897888
Customs tariff number	85371091990

Approvals / Certificates

Ex-Approvals

Logo	Approval	Additional Approval Text	Certificate name
	ATEX TUEV Nord Cert GmbH	EN 60079-0	TÜV 07 ATEX 554086 X en.
Ex nA IIC T4 Gc	**CCCEx** CQST/CNEx	CNCA-C23-01	2020312310000215
	EAC Brjansker Zertifizierungsstelle	TP TC 012/2011	EAC RU C-DE.AM02. B.00163/19
	INMETRO TÜV Rheinland do Brasil Ltda.	IEC 60079	BR-Ex_TÜV 12.1297 X

Subject to changes. Please also observe the further product documentation!

WAGO Kontakttechnik GmbH & Co. KG
Hansastr. 27
32423 Minden
Phone: +49571 887-0 | Fax: +49571 887-169
Email: info.de@wago.com | Web: www.wago.com

Do you have any questions about our products?
We are always happy to take your call at +49 (571) 887-44222.

	TUEV Nord TUEV Nord Cert GmbH	IEC 60079-0	IECEx TUN 09.0001 X
	UL Underwriters Laboratories Inc. (HAZARDOUS LOCATIONS)	UL 121201	E198726 Sec.1

Country specific Approvals

Logo	Approval	Additional Approval Text	Certificate name
	KC National Radio Research Agency	Article 58-2, Clause 3	MSIP-REM-W43-PFC750

Ship Approvals

Logo	Approval	Additional Approval Text	Certificate name
	ABS American Bureau of Shipping	-	19-HG1821926
	BV Bureau Veritas S.A.	-	30389/B0 BV
	DNV GL Det Norske Veritas, Germanischer Lloyd	-	TAA0000194
	KR Korean Register of Shipping	-	KR HMB05880-AC001
	LR Lloyds Register	-	02/20026 (E6)

Subject to changes. Please also observe the further product documentation!

WAGO Kontakttechnik GmbH & Co. KG
Hansastr. 27
32423 Minden
Phone: +49571 887-0 | Fax: +49571 887-169
Email: info.de@wago.com | Web: www.wago.com

Do you have any questions about our products?
We are always happy to take your call at +49 (571) 887-44222.

	NK Nippon Kaiji Kyokai	-	TA17255M
	PRS Polski Rejestr Statków	-	TE/2236 /880590/19
	RINA RINA Germany GmbH	-	ELE066419XG

UL-Approvals

Logo	Approval	Additional Approval Text	Certificate name
	UL UL International Netherlands B.V. (ORDINARY LOCATIONS)	UL 508	E175199 Sec.1

Compatible products

General accessories

	Item no.: 750-921 Bluetooth® Adapter; light gray	www.wago.com/750-921
	Item no.: 750-923 Configuration cable; USB connector; Length: 2.5 m; black	www.wago.com/750-923
	Item no.: 750-923/000-001 Configuration cable; USB connector; Length: 5 m	www.wago.com/750-923 /000-001

shield connection

	Item no.: 790-108 Shield clamping saddle; 11 mm wide; diameter of compatible conductor; 3 … 8 mm	www.wago.com/790-108
	Item no.: 790-116 Shield clamping saddle; 19 mm wide; diameter of compatible conductor; 7 … 16 mm	www.wago.com/790-116
	Item no.: 790-124 Shield clamping saddle; 27 mm wide; diameter of compatible conductor; 6 … 24 mm	www.wago.com/790-124
	Item no.: 790-140 Shield clamping saddle; diameter of compatible conductor	www.wago.com/790-140

Subject to changes. Please also observe the further product documentation!

WAGO Kontakttechnik GmbH & Co. KG
Hansastr. 27
32423 Minden
Phone: +49571 887-0 | Fax: +49571 887-169
Email: info.de@wago.com | Web: www.wago.com

Do you have any questions about our products?
We are always happy to take your call at +49 (571) 887-44222.

	**Item no.: 790-208** Shield clamping saddle; 12.4 mm wide; 3 … 8 mm	www.wago.com/790-208
	**Item no.: 790-216** Shield clamping saddle; 21.8 mm wide; 6 … 16 mm	www.wago.com/790-216
	**Item no.: 790-220** Shield clamping saddle; 30 mm wide; 6 … 20 mm	www.wago.com/790-220
system box		
	**Item no.: 850-804** IP65 enclosure; Stainless steel; WxHxD (400x123x200 mm); 4 x M20, 16 x M16, 28 x M12 cable grip	www.wago.com/850-804
	**Item no.: 850-804/000-001** IP65 enclosure; Stainless steel; WxHxD (400x123x200 mm); 2 x M20, 13 x M16, 32 x M12 cable grip	www.wago.com/850-804/000-001
	**Item no.: 850-805** IP65 enclosure; Stainless steel; WxHxD (600x123x200 mm); 4 x M20, 19 x M16, 67 x M12 cable grip	www.wago.com/850-805
	**Item no.: 850-814/002-000** IP65 enclosure; Sheet steel (RAL 7035); WxHxD (200x120x200 mm); without flange plate	www.wago.com/850-814/002-000
	**Item no.: 850-815/002-000** IP65 enclosure; Sheet steel (RAL 7035); WxHxD (300x120x200 mm); without flange plate	www.wago.com/850-815/002-000
	**Item no.: 850-816/002-000** IP65 enclosure; Sheet steel (RAL 7035); WxHxD (400x120x200 mm); without flange plate	www.wago.com/850-816/002-000
	**Item no.: 850-817/002-000** IP65 enclosure; Sheet steel (RAL 7035); WxHxD (600x120x200 mm); without flange plate	www.wago.com/850-817/002-000
	**Item no.: 850-825** IP65 enclosure; Aluminium (RAL 7032); WxHxD (160x100x160 mm); 9 x M12, 4 x M20	www.wago.com/850-825
	**Item no.: 850-826** IP65 enclosure; Aluminium (RAL 7032); WxHxD (240x100x160 mm); 4 x M20, 4 x M16, 14 x M12 cable grip	www.wago.com/850-826
	**Item no.: 850-826/002-000** IP65 enclosure; Aluminium (RAL 7035); WxHxD (240x100x160 mm); 4 x M20, 4 x M16, 14 x M12 cable grip	www.wago.com/850-826/002-000
	**Item no.: 850-827** IP65 enclosure; Aluminium (RAL 7032); WxHxD (320x100x160 mm); 4 x M20, 8 x M16, 17 x M12 cable grip	www.wago.com/850-827
	**Item no.: 850-827/002-000** IP65 enclosure; Aluminium (RAL 7035); WxHxD (320x100x160 mm); 4 x M20, 8 x M16, 17 x M12 cable grip	www.wago.com/850-827/002-000

Subject to changes. Please also observe the further product documentation!

WAGO Kontakttechnik GmbH & Co. KG
Hansastr. 27
32423 Minden
Phone: +49571 887-0 | Fax: +49571 887-169
Email: info.de@wago.com | Web: www.wago.com

Do you have any questions about our products?
We are always happy to take your call at +49 (571) 887-44222.

	**Item no.: 850-828** IP65 enclosure; Aluminium (RAL 7032); WxHxD (480x100x160 mm); 4 x M20, 10 x M16, 35 x M12 cable grip	www.wago.com/850-828
	**Item no.: 850-828/002-000** IP65 enclosure; Aluminium (RAL 7035); WxHxD (480x100x160 mm); 4 x M20, 10 x M16, 35 x M12 cable grip	www.wago.com/850-828/002-000
	**Item no.: 850-834** IP65 enclosure; Polyester (RAL 7032); WxHxD (164x100x164 mm); 9 x M12, 4 x M20	www.wago.com/850-834
	**Item no.: 850-835** IP65 enclosure; Polyester (RAL 7032); WxHxD (244x100x164 mm); 4 x M20, 4 x M16, 14 x M12 cable grip	www.wago.com/850-835
	**Item no.: 850-836** IP65 enclosure; Polyester (RAL 7032); WxHxD (324x100x164 mm); 4 x M20, 8 x M16, 17 x M12 cable grip	www.wago.com/850-836

Carrier rail

	**Item no.: 210-112** Steel carrier rail; 35 x 7.5 mm; 1 mm thick; 2 m long; slotted; according to EN 60715; "Hole width 25 mm; silver-colored	www.wago.com/210-112
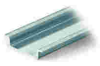	**Item no.: 210-113** Steel carrier rail; 35 x 7.5 mm; 1 mm thick; 2 m long; unslotted; according to EN 60715; silver-colored	www.wago.com/210-113
	**Item no.: 210-114** Steel carrier rail; 35 x 15 mm; 1.5 mm thick; 2 m long; unslotted; similar to EN 60715; silver-colored	www.wago.com/210-114
	**Item no.: 210-115** Steel carrier rail; 35 x 7.5 mm; 1 mm thick; 2 m long; slotted; according to EN 60715; "Hole width 18 mm; silver-colored	www.wago.com/210-115
	**Item no.: 210-118** Steel carrier rail; 35 x 15 mm; 2.3 mm thick; 2 m long; unslotted; according to EN 60715; silver-colored	www.wago.com/210-118
	**Item no.: 210-196** Aluminum carrier rail; 35 x 8.2 mm; 1.6 mm thick; 2 m long; unslotted; similar to EN 60715; silver-colored	www.wago.com/210-196
	**Item no.: 210-197** Steel carrier rail; 35 x 15 mm; 1.5 mm thick; 2 m long; slotted; similar to EN 60715; silver-colored	www.wago.com/210-197
	**Item no.: 210-198** Copper carrier rail; 35 x 15 mm; 2.3 mm thick; 2 m long; unslotted; according to EN 60715; copper-colored	www.wago.com/210-198
	**Item no.: 210-504** Steel carrier rail; 35 x 7.5 mm; 1 mm thick; 2 m long; slotted; galvanized; according to EN 60715; silver-colored	www.wago.com/210-504
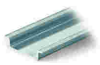	**Item no.: 210-505** Steel carrier rail; 35 x 7.5 mm; 1 mm thick; 2 m long; unslotted; galvanized; according to EN 60715; silver-colored	www.wago.com/210-505
	**Item no.: 210-506** Steel carrier rail; 35 x 15 mm; 1.5 mm thick; 2 m long; unslotted; galvanized; similar to EN 60715; silver-colored	www.wago.com/210-506

Subject to changes. Please also observe the further product documentation!

WAGO Kontakttechnik GmbH & Co. KG
Hansastr. 27
32423 Minden
Phone: +49571 887-0 | Fax: +49571 887-169
Email: info.de@wago.com | Web: www.wago.com

Do you have any questions about our products?
We are always happy to take your call at +49 (571) 887-44222.

	**Item no.: 210-508** Steel carrier rail; 35 x 15 mm; 1.5 mm thick; 2 m long; slotted; galvanized; similar to EN 60715; silver-colored	www.wago.com/210-508

wiring and connectors

	**Item no.: 750-975** ETHERNET RJ-45 connector, IP20; ETHERNET 10/100 Mbit/s; for field assembly; light gray	www.wago.com/750-975
	**Item no.: 750-977/000-011** Connector ETHERNET; RJ-45; Cat. 6A; straight; Code T568A; AWG 22	www.wago.com/750-977/000-011
	**Item no.: 750-977/000-012** Connector ETHERNET; RJ-45; Cat. 6A; straight; Code T568B; AWG 22	www.wago.com/750-977/000-012
	**Item no.: 750-977/000-021** Connector ETHERNET; RJ-45; Cat. 6A; straight; Code T568A; AWG 24	www.wago.com/750-977/000-021
	**Item no.: 750-977/000-022** Connector ETHERNET; RJ-45; Cat. 6A; straight; Code T568B; AWG 24	www.wago.com/750-977/000-022
	**Item no.: 750-978/000-011** Connector ETHERNET; RJ-45; Cat. 6A; straight; Code T568A; AWG 22; Strain relief	www.wago.com/750-978/000-011
	**Item no.: 750-978/000-012** Connector ETHERNET; RJ-45; Cat. 6A; straight; Code T568B; AWG 22; Strain relief	www.wago.com/750-978/000-012
	**Item no.: 750-978/000-021** Connector ETHERNET; RJ-45; Cat. 6A; straight; Code T568A; AWG 24; Strain relief	www.wago.com/750-978/000-021
	**Item no.: 750-978/000-022** Connector ETHERNET; RJ-45; Cat. 6A; straight; Code T568B; AWG 24; Strain relief	www.wago.com/750-978/000-022
	**Item no.: 750-979/000-011** Connector ETHERNET; RJ-45; Cat. 6A; angled; Code T568A; AWG 22; Strain relief	www.wago.com/750-979/000-011
	**Item no.: 750-979/000-012** Connector ETHERNET; RJ-45; Cat. 6A; angled; Code T568B; AWG 22; Strain relief	www.wago.com/750-979/000-012
	**Item no.: 750-979/000-021** Connector ETHERNET; RJ-45; Cat. 6A; angled; Code T568A; AWG 24; Strain relief	www.wago.com/750-979/000-021

Subject to changes. Please also observe the further product documentation!

WAGO Kontakttechnik GmbH & Co. KG
Hansastr. 27
32423 Minden
Phone: +49571 887-0 | Fax: +49571 887-169
Email: info.de@wago.com | Web: www.wago.com

Do you have any questions about our products?
We are always happy to take your call at +49 (571) 887-44222.

	Item no.: 750-979/000-022 Connector ETHERNET; RJ-45; Cat. 6A; angled; Code T568B; AWG 24; Strain relief	www.wago.com/750-979/000-022

Marking accessories

	Item no.: 2009-145 Mini-WSB Inline; for Smart Printer; 1700 pieces on roll; stretchable 5 - 5.2 mm; plain; snap-on type; white	www.wago.com/2009-145
	Item no.: 2009-145/000-002 Mini-WSB Inline; for Smart Printer; 1700 pieces on roll; stretchable 5 - 5.2 mm; plain; snap-on type; yellow	www.wago.com/2009-145/000-002
	Item no.: 2009-145/000-005 Mini-WSB Inline; for Smart Printer; 1700 pieces on roll; stretchable 5 - 5.2 mm; plain; snap-on type; red	www.wago.com/2009-145/000-005
	Item no.: 2009-145/000-006 Mini-WSB Inline; for Smart Printer; 1700 pieces on roll; stretchable 5 - 5.2 mm; plain; snap-on type; blue	www.wago.com/2009-145/000-006
	Item no.: 2009-145/000-007 Mini-WSB Inline; for Smart Printer; 1700 pieces on roll; stretchable 5 - 5.2 mm; plain; snap-on type; gray	www.wago.com/2009-145/000-007
	Item no.: 2009-145/000-012 Mini-WSB Inline; for Smart Printer; 1700 pieces on roll; stretchable 5 - 5.2 mm; plain; snap-on type; orange	www.wago.com/2009-145/000-012
	Item no.: 2009-145/000-023 Mini-WSB Inline; for Smart Printer; 1700 pieces on roll; stretchable 5 - 5.2 mm; plain; snap-on type; green	www.wago.com/2009-145/000-023
	Item no.: 2009-145/000-024 Mini-WSB Inline; for Smart Printer; 1700 pieces on roll; stretchable 5 - 5.2 mm; plain; snap-on type; violet	www.wago.com/2009-145/000-024
	Item no.: 248-501 Miniature WSB Quick marking system; plain; Marker width 5 mm; 10 strips with 10 markers per card	www.wago.com/248-501
	Item no.: 248-501/000-002 Mini-WSB marking card; as card; not stretchable; plain; snap-on type; yellow	www.wago.com/248-501/000-002
	Item no.: 248-501/000-005 Mini-WSB marking card; as card; not stretchable; plain; snap-on type; red	www.wago.com/248-501/000-005
	Item no.: 248-501/000-006 Mini-WSB marking card; as card; not stretchable; plain; snap-on type; blue	www.wago.com/248-501/000-006

Subject to changes. Please also observe the further product documentation!

WAGO Kontakttechnik GmbH & Co. KG
Hansastr. 27
32423 Minden
Phone: +49571 887-0 | Fax: +49571 887-169
Email: info.de@wago.com | Web: www.wago.com

Do you have any questions about our products?
We are always happy to take your call at +49 (571) 887-44222.

	**Item no.: 248-501/000-007** Mini-WSB marking card; as card; not stretchable; plain; snap-on type; gray	www.wago.com/248-501/000-007
	**Item no.: 248-501/000-012** Mini-WSB marking card; as card; not stretchable; plain; snap-on type; orange	www.wago.com/248-501/000-012
	**Item no.: 248-501/000-017** Mini-WSB marking card; as card; not stretchable; plain; snap-on type; light green	www.wago.com/248-501/000-017
	**Item no.: 248-501/000-023** Mini-WSB marking card; as card; not stretchable; plain; snap-on type; green	www.wago.com/248-501/000-023
	**Item no.: 248-501/000-024** Mini-WSB marking card; as card; not stretchable; plain; snap-on type; violet	www.wago.com/248-501/000-024
	**Item no.: 750-100** Marker card; as a DIN A4 sheet; plain; white	www.wago.com/750-100
	**Item no.: 750-103** Group marker carrier; transparent	www.wago.com/750-103
	**Item no.: 750-106** Group marker carrier; transparent	www.wago.com/750-106

software

	**Item no.: 759-333** WAGO-I/O-PRO	www.wago.com/759-333
	**Item no.: 759-333/000-923** WAGO-I/O-PRO; USB-Set	www.wago.com/759-333/000-923
	**Item no.: 759-911** WAGO-I/O-PRO; CD	www.wago.com/759-911

Downloads

Documentation

Manual

ETHERNET TCP/IP Programmable Fieldbus Controller 10 Mbit/s; digital and analog signals	V 1.2.0	pdf 5.8 MB	Download
Systemhandbuch WAGO I/O System 750 / 753 Dezentrale Automatisierungstechnik	V 3.0.0 4. 3. 2021	pdf 6.6 MB	Download

Subject to changes. Please also observe the further product documentation!

WAGO Kontakttechnik GmbH & Co. KG
Hansastr. 27
32423 Minden
Phone: +49571 887-0 | Fax: +49571 887-169
Email: info.de@wago.com | Web: www.wago.com

Do you have any questions about our products?
We are always happy to take your call at +49 (571) 887-44222.

Bid Text

750-843 doc - Datei	22. 7. 2015	doc 33.3 kB	Download
750-843 X81 - Datei	19. 2. 2019	xml 6.4 kB	Download

System Description

Use in Hazardous Environments Term definition, marking and installation regulations	V 1.0.0	pdf 1.0 MB	Download
Overview on WAGO-I/O-SYSTEM 750 approvals		pdf 780.2 kB	Download
750 Controller, General Product Information		pdf 621.9 kB	Download

Additional Information

Disposal; Electrical and electronic equipment, Packaging	V 1.0.0	pdf 265.8 kB	Download

Application Notes

Application note, other

Anbindung an MCPS Datenerfassungs Software (a116400) MCPS (Multi Channel Process System) ist eine PC-basierte Datenerfassungssoftware, die auf den Betriebsystemen Windows2000, XP, Vista oder höher läuft. Alle Meß- und Auswerteaufgaben werden allein durch Konfiguration der Software vorgenommen. MCPS ist KEINE grafische Programmieroberfläche und kann somit leicht von jedem Anwender bedient werden.	V1.1.1 20. 5. 2009	zip 405.5 kB	Download

Engineering-Software

Configuration and Commissioning Software

WAGO-IO-PRO Demo-Version (759-912) / Serie 750, 758 und 762	2.3.9.61 3. 7. 2015	zip 372.0 MB	Download
WAGO BootPServer / Serie 750 und 767	1.0 7. 3. 2000	zip 1.1 MB	Download

Subject to changes. Please also observe the further product documentation!

WAGO Kontakttechnik GmbH & Co. KG
Hansastr. 27
32423 Minden
Phone: +49571 887-0 | Fax: +49571 887-169
Email: info.de@wago.com | Web: www.wago.com

Do you have any questions about our products?
We are always happy to take your call at +49 (571) 887-44222.

WAGO Extension Setting / Serie 750	2.0.2 9. 3. 2011	zip 5.4 MB	Download
(759-316) WAGO Ethernet Settings / Serie 750	6.14.01.00 29. 3. 2019	exe 20.0 MB	Download

Runtime Software

Firmware

Firmware: 750-843 Controller ETHERNET; 1st Generation; ECO; light gray	03 26. 2. 2018	zip 464.3 kB	Download

CAD/CAE-Data

CAD data

2D/3D Models 750-843		URL	Download

CAE data

EPLAN Data Portal 750-843		URL	Download
ZUKEN Portal 750-843		URL	Download
WSCAD Universe 750-843		URL	Download

Device Files

Device Description File

MIB-Datei für Ethernet-Controller / Serie 750	2.0 3. 4. 2012	zip 6.1 kB	Download

Device Driver

WAGO USB Service Kabel Treiber / Serie 750 und 857	6.5.3.0 10. 9. 2014	zip 4.8 MB	Download

Environmental Product Compliance

Compliance Search

Environmental Product Compliance 750-843

Subject to changes. Please also observe the further product documentation!

WAGO Kontakttechnik GmbH & Co. KG
Hansastr. 27
32423 Minden
Phone: +49571 887-0 | Fax: +49571 887-169
Email: info.de@wago.com | Web: www.wago.com

Do you have any questions about our products?
We are always happy to take your call at +49 (571) 887-44222.



Controller ETHERNET; 1st Generation; ECO; light gray

Installation Notes

Product family

Controller 750
Show all products from the family

Subject to changes. Please also observe the further product documentation!

WAGO Kontakttechnik GmbH & Co. KG
Hansastr. 27
32423 Minden
Phone: +49571 887-0 | Fax: +49571 887-169
Email: info.de@wago.com | Web: www.wago.com

Do you have any questions about our products?
We are always happy to take your call at +49 (571) 887-44222.