2-channel digital output; 230 VAC; 0.3 A; Solid-state

Item No.: 750-509



2-channel digital output; 230 VAC; 0.3 A; Solid-state

Marking

RoHS ✓
Compliant

Business data

Supplier	*WAGO*
Item no.	*750-509*
GTIN / EAN	*4045454393403*
Content	*1*
Order amount	*1*
Customer item number	

Notes

Item description:This digital output module transmits control signals from the automation device to the connected actuators.The semiconductor output is electrically isolated from the control side. Power supply for the outputs is provided via the power jumper contacts.The switched status of the outputs is shown by an LED.Notice:An additional supply module must be added for operation with 230 V AC/DC!

Technical data

Miscellaneous

Packaging type	*BOX*
Number of digital outputs	*2*
Total number of channels (module)	*2*

Technical data	
Type of signal	*0 … 250 VAC/DC*
Output switching design	*solid-state load relay*
Output current per channel [A]	*0.3 [A]*
Protection against incorrect wiring	*Überspannungsschutz 275 V über Varistor*
Actuator connection	*2 x (2 Leiter, 3 Leiter)*
Switching frequency max.	*5 Hz*
Switching frequency max. (2)	*0.5 Hz*
Switching frequency max. with load type	*5 Hz; 24 V; 0,3 A; DF = 50 %*
Switching frequency max. with load type (2)	*0.5 Hz; 230 V; 0,3 A; DF = 50 %*
Type of load	*resistive, inductive*
Contact resistance max. []	*0.032 []*
Contact resistance typ. []	*2.1 []*
Making capacity	*0.5 A (20 s)*
Making capacity (2)	*1.5 A (0.1 s)*
Pull-in time (max.) [ms]	*10 [ms]*
Pull-in time (typ.) [ms]	*4 [ms]*
Drop-out time (max.) [ms]	*3 [ms]*
Drop-out time (typ.) [ms]	*0.1 [ms]*
Datenbreite Ausgangsdaten (intern) max. [Bit]	*2 [Bit]*
System supply voltage	*DC 5 V; über Datenkontakte*
Current consumption, system supply [mA]	*10 [mA]*
Field supply voltage	*AC/DC 0 … 230 V; über Leistungskontakte*
Current carrying capacity of the power jumper contacts [A]	*10 [A]*
Number of incoming power jumper contacts	*3*
Number of outgoing power jumper contacts	*3*
Isolation field – system	*1500 V AC (1 min)*
Degree of pollution (5)	*2 per IEC 61131-2*
Number of connections: Inputs/outputs	*8*
Connection technology: inputs/outputs	*CAGE CLAMP®*
Connection type (1)	*Ein-/Ausgänge*
Solid conductor	*0.08 … 2.5 mm² / 28 … 14 AWG*
Fine-stranded conductor	*0.08 … 2.5 mm² / 28 … 14 AWG*
Strip length	*8 … 9 mm / 0.31 … 0.35 Inch*
Width	*12 mm / 0.472 Inch*
Height	*69.8 mm / 2.748 Inch*

Technical data	
Height from upper-edge of DIN-35 rail	*62.6 mm / 2.465 Inch*
Depth	*100 mm / 3.937 Inch*
Type of mounting	*Carrier rail 35 x 15*
Indicators	*LED (A, C) green: Status DO 1, DO 2*
Color	*light gray*
Housing material	*Polycarbonate, polyamide 6.6*
Fire load [MJ]	*1.248 [MJ]*
Weight [g]	*50.921 [g]*
Conformity marking	*CE*
Ambient temperature (operation)	*0 … 55 °C*
Ambient temperature (storage)	*-25 … 85 °C*
Degree of protection	*IP20*
Mounting position	*any*
Relative air humidity (no condensation) [%]	*95 [%]*
Vibration resistance	*acc. to IEC 60068-2-6*
Shock resistance	*acc. to IEC 60068-2-27*
EMC immunity to interference	*acc. to EN 61000-6-2, marine applications*
EMC emission of interference	*acc. to EN 61000-6-4, marine applications*
Exposure to pollutants	*gemäß IEC 60068-2-42 und IEC 60068-2-43*
Zulässige Schadstoffkonzentration H2S bei einer r	*10 [ppm]*
Zulässige Schadstoffkonzentration SO2 bei einer r	*25 [ppm]*

Images & drawings



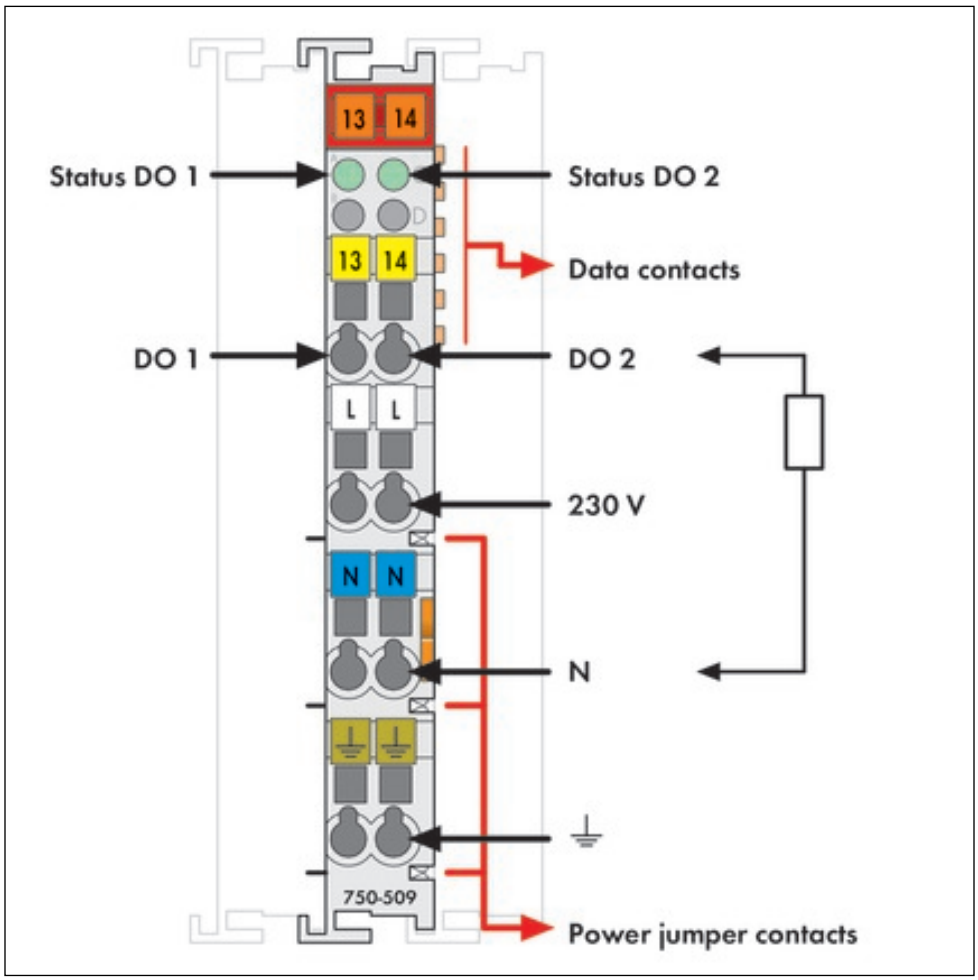
13
14
Status DO 1
Status DO 2
13
14
Data contacts
DO 1
DO 2
L
L
230 V
N
N
N
750-509
Power jumper contacts

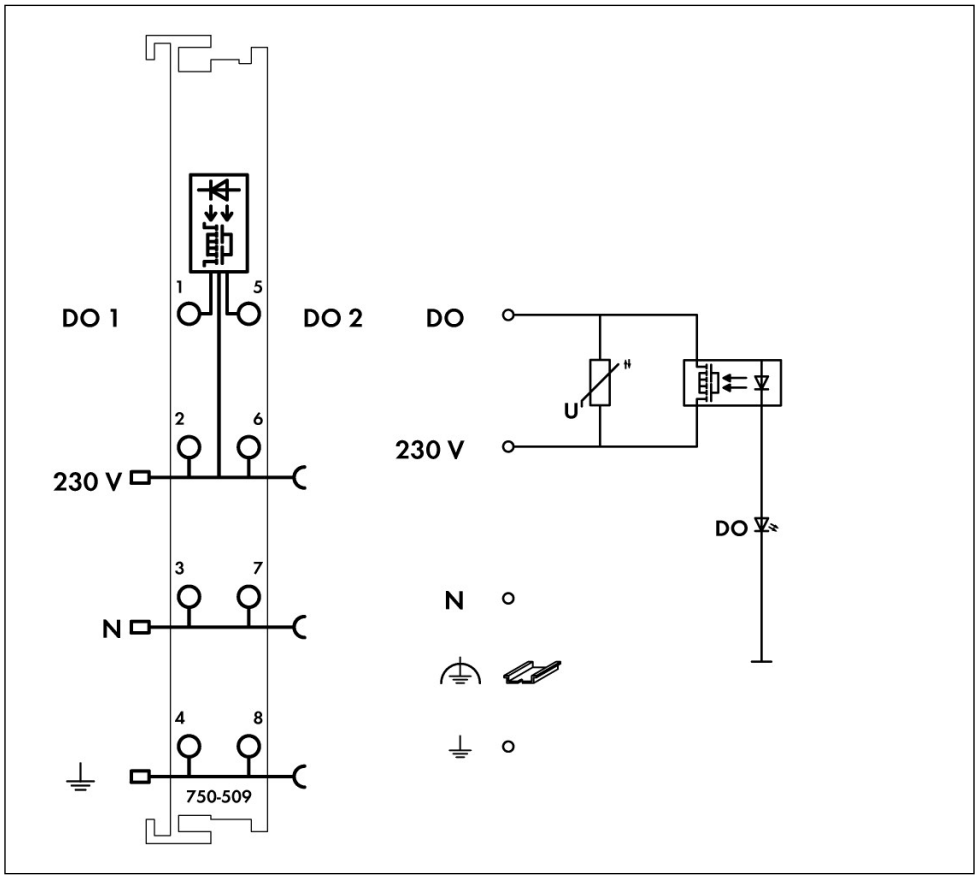

Address

WAGO Kontakttechnik GmbH & Co. KG
Hansastr. 27
32423 Minden
Telefon: 0571/887-0
Fax: 0571/887-169
http://www.wago.com
© WAGO Kontakttechnik GmbH & Co. KG
Technische Änderungen und Irrtümer vorbehalten.