Data Sheet | Item Number: 704-9004

Interface module for system wiring; Pluggable connector per DIN 41651; Male connector; 20-pole; Redundancy module for control inputs; in mounting carrier

https://www.wago.com/704-9004



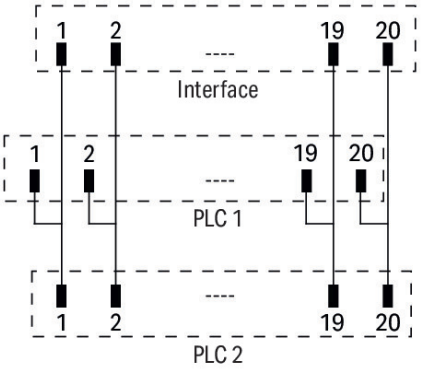

Electrical data

Inputs/outputs	16-channel digital input
Nominal operating voltage	DC 24 V
Limiting continuous current	1 A

Safety and protection

Rated voltage	50 V
Rated surge voltage	0.8 kV
Pollution degree	2

Connection data

Connection 1

Connector	DIN 41651 connector; male connector
Pole number 1	20
Connection type 1	System

Connection 2

Pole number 2	20

Connection 3

Pole number 3	20

Physical data

Width	45 mm / 1.771 inches
Height	85 mm / 3.345 inches
Depth from upper-edge of DIN-rail	45 mm / 1.771 inches

Mechanical data

Mounting type	DIN-35 rail

Material data

Fire load	0.999 MJ
Weight	53.5 g

Environmental requirements

Ambient temperature (operation)	-20 … +50 °C
Ambient temperature (storage)	-40 … +70 °C
Relative humidity	≤ 85% (non-condensing)

Commercial data

ETIM 8.0	EC002780
ETIM 7.0	EC002780
PU (SPU)	1 pcs
Packaging type	Box
Country of origin	DE
GTIN	4055143982658
Customs tariff number	85369010000

Environmental Product Compliance

RoHS Compliance Status	Compliant,No Exemption

Downloads

Environmental Product Compliance

Compliance Search

Environmental Product Compliance 704-9004

Documentation

System Description

WAGO System Wiring, Selection Guide	pdf 533.15 KB	

CAD/CAE-Data

CAD data

2D/3D Models
704-9004