# Data Sheet | Item Number: 704-5303

Interface module for system wiring; Pluggable connector per DIN 41651; Male connector; 10-pole; 8-channel relay output; 1 changeover contact; Triple-deck PCB terminal blocks; in mounting carrier

https://www.wago.com/704-5303

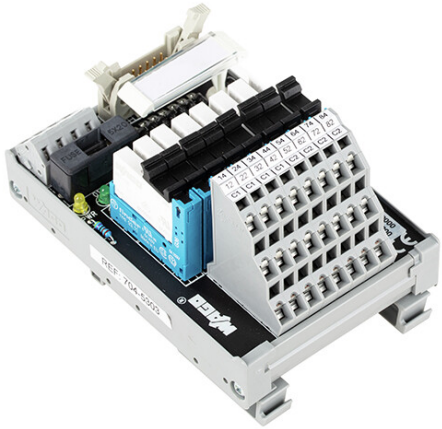

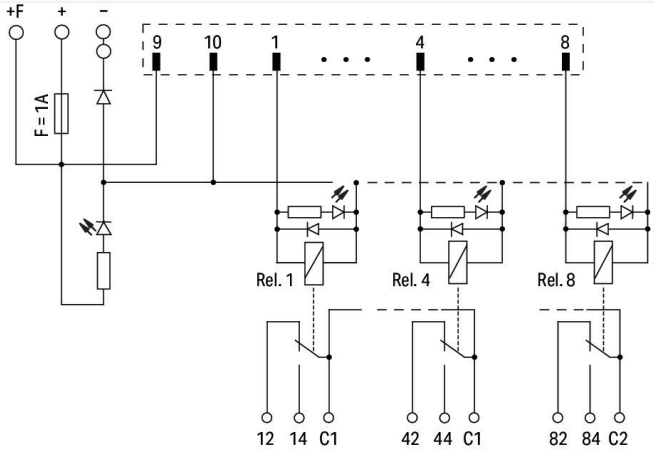


## Notes

| | |
|---|---|
| Note | Independent of the relay used, the maximum continuous current of the common changeover contacts is 12 A. |

## Electrical data

| | |
|---|---|
| Inputs/outputs | 8-channel relay output |
| Nominal operating voltage | DC 24 V |
| Operating voltage range | ±10 % |
| Number of changeover/switchover contacts | 1 |
| Limiting continuous current | 5 A |
| Switching voltage (max.) | AC 250 V; DC 48 V |
| Switching power (resistive) max. | AC 1250 VA; DC 50 W |
| Mechanical life | 10 x $10^6$ switching operations |
| Status indicator | Green LED (channel)<br>Yellow LED (power supply) |
| Internal fuse | Supply: 1 A; Relay output: - |
| WAGO Basic Relay | 857-152 |
| Specialty functions | Common changeover contacts of 4 relays |

## Safety and protection

| | |
|---|---|
| Rated voltage | 50 V |
| Rated surge voltage | 0.8 kV |
| Pollution degree | 2 |
| Dielectric strength (control/load circuit) (AC, 1 min) | 4 kVrms |
| Dielectric strength (load/load circuit) (AC, 1 min) | 1 kVrms |

## Compatibility

### Siemens

| | |
|---|---|
| Siemens S7-300 | 6ES7 322-1BF01-0AA0<br>6ES7 322-8BF00-0AB0<br>6ES7 323-1BH01-0AA0<br>6ES7 327-1BH00-0AB0<br>6ES7 326-2BF01-0AB0<br>6ES7 326-2BF10-0AB0 |
| Siemens S7-1500 | 6ES7 522-1BF00-0AB0 |

### Siemens

| | |
|---|---|
| Siemens ET200SP | 6ES7 132-6BF00-0CA0<br>6ES7 132-6BF01-0AA0<br>6ES7 132-6BF01-0BA0 |


Continued on next page

| GE Fanuc | |
|---|---|
| GE Fanuc 9030 | IC693 MDL730<br>IC693 MDL732 |

| Schneider | |
|---|---|
| Schneider Modicon TM3 | TM3 DQ8T(G) |
| Schneider Modicon M340 | BMX DDM 16022 |
| Schneider Modicon Quantum | 140 DDM 390 00 |
| Schneider TSX | TSX DSY 08T2 |

| Rockwell | |
|---|---|
| Rockwell Compact Logix | 1769 - OB8 |

| Omron | |
|---|---|
| Omron CJ1W | CJ1W-OD204 |

| WAGO | |
|---|---|
| WAGO I/O System 750 | 750-1502 |
| WAGO I/O System 753 | 753-530 (x1) |

## Connection data

| Connection 1 | |
|---|---|
| Connector | DIN 41651 connector; male connector |
| Pole number 1 | 10 |
| Connection type 1 | System |
| Mating direction | vertical |

| Connection 2 | |
|---|---|
| Design 2 | PCB terminal blocks (triple-deck) |
| Pole number 2 | 24 |
| Connection type 2 | Field |
| WAGO connector 2 | WAGO 737 Series |
| Solid conductor 2 | 0.08 … 2.5 mm² / 28 … 12 AWG |
| Fine-stranded conductor 2 | 0.08 … 2.5 mm² / 28 … 12 AWG |
| Strip length 2 | 5 … 6 mm / 0.2 … 0.24 inches |

| Connection 3 | |
|---|---|
| Design 3 | PCB terminal blocks |
| Pole number 3 | 6 |
| Connection type 3 | Power supply |
| WAGO connector 3 | WAGO 236 Series |
| Solid conductor 3 | 0.08 … 2.5 mm² / 28 … 12 AWG |
| Fine-stranded conductor 3 | 0.08 … 2.5 mm² / 28 … 12 AWG |
| Strip length 3 | 5 … 6 mm / 0.2 … 0.24 inches |

## Physical data

| | |
|---|---|
| Width | 70 mm / 2.756 inches |
| Height | 105 mm / 4.134 inches |
| Depth from upper-edge of DIN-rail | 65 mm / 2.559 inches |

## Mechanical data

| | |
|---|---|
| Mounting type | DIN-35 rail |

## Material data

| | |
|---|---|
| Contact material (relay) | $AgSnO_2$ |
| Fire load | 1.304 MJ |
| Weight | 171.7 g |

## Environmental requirements

| | |
|---|---|
| Ambient temperature (operation) | -25 … +40 °C |
| Ambient temperature (storage) | -40 … +70 °C |
| Relative humidity | ≤ 85% (non-condensing) |

## Commercial data

| | |
|---|---|
| ETIM 8.0 | EC002780 |
| ETIM 7.0 | EC002780 |
| PU (SPU) | 1 pcs |
| Packaging type | Box |
| Country of origin | DE |
| GTIN | 4055143982665 |
| Customs tariff number | 85369010000 |

## Environmental Product Compliance

| | |
|---|---|
| RoHS Compliance Status | Compliant,No Exemption |

## Approvals / Certificates

### Declarations of conformity and manufacturer's declarations

| Approval | Standard | Certificate Name |
|---|---|---|
| EU-Declaration of Conformity<br>WAGO GmbH & Co. KG | - | - |
| UK-Declaration of Conformity<br>WAGO GmbH & Co. KG | - | - |

## Downloads

### Environmental Product Compliance

**Compliance Search**

Environmental Product Compliance 704-5303

## Documentation


Continued on next page

| System Description | | |
|---|---|---|
| WAGO System Wiring, Selection Guide | pdf 533.15 KB | |

## CAD/CAE-Data

| CAD data | |
|---|---|
| 2D/3D Models 704-5303 | |