Data Sheet | Item Number: 704-5204

Interface module for system wiring; Pluggable connector per DIN 41651; Male connector; 20-pole; 16-channel relay output; 1 changeover contact; Double-deck PCB terminal blocks; for DC loads; in mounting carrier

https://www.wago.com/704-5204

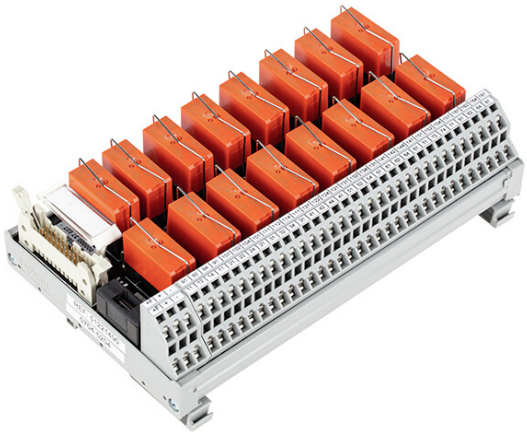

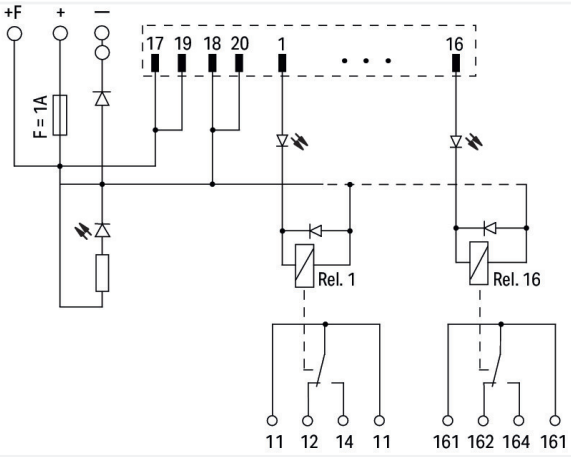

Notes

Note	Independent of the relay used, the maximum continuous current is 5A per channel.

Electrical data

Inputs/outputs	16-channel relay output
Nominal operating voltage	DC 24 V
Operating voltage range	±10 %
Number of changeover/switchover contacts	1
Limiting continuous current	5 A
Making capacity	2 ms 16 A
Switching voltage (max.)	AC 250 V; DC 150 V
Switching power (resistive) max.	AC 1250 VA; DC 50 W
Mechanical life	30 x 10^6 switching operations
Status indicator	Green LED (channel) Yellow LED (power supply)
Internal fuse	Supply: 1 A; Relay output: -
WAGO Basic Relay	788-156
Specialty functions	For DC Loads

Safety and protection

Rated voltage	50 V
Rated surge voltage	0.8 kV
Pollution degree	2
Dielectric strength (control/load circuit) (AC, 1 min)	2.5 kVrms
Dielectric strength (load/load circuit) (AC, 1 min)	1 kVrms

Compatibility

Siemens

Siemens S7-300	6ES7 313-5BE01-0AB0 6ES7 313-5BG04-0AB0 6ES7 313-6BE01-0AB0 6ES7 313-6BF03-0AB0 6ES7 313-6CE01-0AB0 6ES7 313-6CF03-0AB0 6ES7 314-6BF01-0AB0 6ES7 314-6BG03-0AB0 6ES7 314-6CF01-0AB0 6ES7 314-6CG03-0AB0 6ES7 322-1BH01-0AA0 6ES7 322-1BH10-0AA0 6ES7 322-1BH80-0AA0 6ES7 322-1BL00-0AA0 6ES7 322-1BP00-0AA0 6ES7 322-1EH01-0AA0 6ES7 322-8BH01/8BH10-0AB0 6ES7 323-1BL00-0AA0
Siemens S7-400	6ES7 422-1BL00-0AA0
Siemens S7-1500	6ES7 511-1CK00-0AB0 6ES7 512-1CK00-0AB0 6ES7 522-1BH00-0AB0 6ES7 522-1BH01-0AB0 6ES7 522-1BH10-0AA0 6ES7 522-1BL00-0AB0 6ES7 522-1BL01-0AB0 6ES7 522-1BL10-0AA0 6ES7 522-1BP00-0AA0 6ES7 523-1BL00-0AA0
Siemens ET200SP	6ES7 132-6BH00-0AA0 6ES7 132-6BH00-2AA0 6ES7 132-6BH01-0BA0 6ES7 132-6BH01-2BA0

GE Fanuc

GE Fanuc 9030	IC693 MDL740 IC693 MDL742 IC693 MDL753
GE Fanuc RX3i	IC694 MDL753

Schneider

Schneider Modicon TM3	TM3 DQ16T(G) TM3 DQ16TK TM3 DQ32TK
Schneider Modicon M340	BMX DDO 1602 BMX DDO 3202K BMX DDO 6402K BMX DDM 3202K
Schneider Modicon Quantum	140 DDO 353 00 140 DDO 353 01 140 DDO 364 00 140 DVO 853 00
Schneider TSX	TSX DSY 16T2 TSX DSY 32T2K TSX DSY 64T2K TSX DMY 28FK TSX DMY 28RFK
Schneider Twido	TM2 DDO 16TK TM2 DDO 32TK

Rockwell

Rockwell Compact Logix	1769 - OB16 1769 - OB16P 1769 - OB32 1769 - OB32T
Rockwell Control Logix	1756 - OB16E 1756 - OB32

Omron

Omron CJ1W	CJ1W-MD232 CJ1W-OD212 CJ1W-OD232 CJ1W-OD262

WAGO

WAGO I/O System 750	750-1500
WAGO I/O System 753	753-530 (x2)

Connection data

Continued on next page

Connection 1

Connector	DIN 41651 connector; male connector
Pole number 1	20
Connection type 1	System
Mating direction	vertical

Connection 2

Design 2	PCB terminal blocks (double-deck)
Pole number 2	64
Connection type 2	Field
WAGO connector 2	WAGO 736 Series
Solid conductor 2	0.08 … 2.5 mm² / 28 … 12 AWG
Fine-stranded conductor 2	0.08 … 2.5 mm² / 28 … 12 AWG
Strip length 2	5 … 6 mm / 0.2 … 0.24 inches

Connection 3

Design 3	PCB terminal blocks (double-deck)
Pole number 3	4
Connection type 3	Power supply
WAGO connector 3	WAGO 736 Series
Solid conductor 3	0.08 … 2.5 mm² / 28 … 12 AWG
Fine-stranded conductor 3	0.08 … 2.5 mm² / 28 … 12 AWG
Strip length 3	5 … 6 mm / 0.2 … 0.24 inches

Physical data

Width	180 mm / 7.087 inches
Height	105 mm / 4.134 inches
Depth from upper-edge of DIN-rail	50 mm / 1.969 inches

Mechanical data

Mounting type	DIN-35 rail

Material data

Contact material (relay)	AgNi 90/10
Fire load	12.846 MJ
Weight	419.5 g

Environmental requirements

Ambient temperature (operation)	-25 … +50 °C
Ambient temperature (storage)	-40 … +70 °C
Relative humidity	≤ 85% (non-condensing)

Commercial data

ETIM 8.0	EC002780
ETIM 7.0	EC002780
PU (SPU)	1 pcs
Packaging type	Box
Country of origin	DE
GTIN	4066966079005
Customs tariff number	85389091890

Continued on next page

Environmental Product Compliance

RoHS Compliance Status	Compliant,No Exemption

Approvals / Certificates

Declarations of conformity and manufacturer's declarations

Approval	Standard	Certificate Name
EU-Declaration of Conformity WAGO GmbH & Co. KG	-	-
UK-Declaration of Conformity WAGO GmbH & Co. KG	-	-

Downloads

Environmental Product Compliance

Compliance Search

Environmental Product Compliance 704-5204

Documentation

System Description

WAGO System Wiring, Selection Guide	pdf 533.15 KB	

CAD/CAE-Data

CAD data

2D/3D Models 704-5204