Data Sheet | Item Number: 704-5023

Interface module for system wiring; Pluggable connector per DIN 41651; Male connector; 10-pole; 8-channel relay output; 1 changeover contact; Triple-deck PCB terminal blocks; without relay; in mounting carrier

https://www.wago.com/704-5023

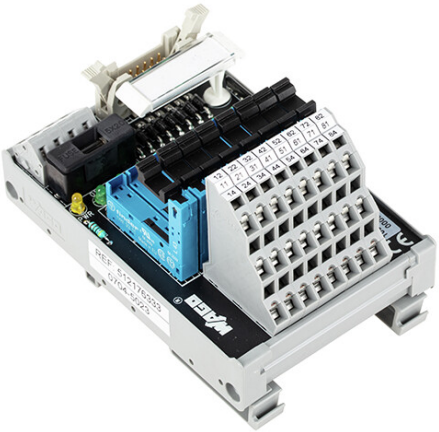

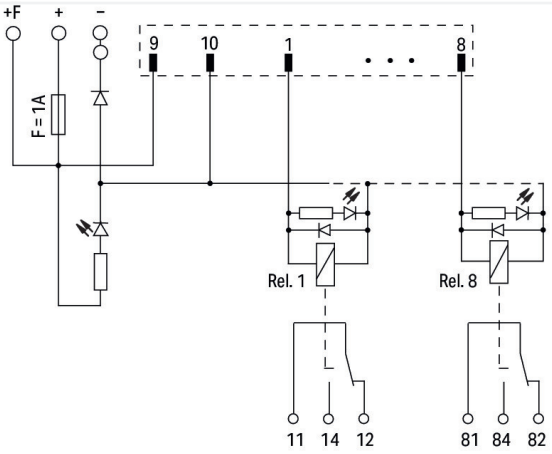

Electrical data

Inputs/outputs	8-channel relay output
Nominal operating voltage	DC 24 V
Operating voltage range	±10 %
Total current	12 A
Number of changeover/switchover contacts	1
Limiting continuous current	5 A
Switching voltage (max.)	AC 250 V; DC 48 V
Switching power (resistive) max.	AC 1250 VA; DC 50 W
Status indicator	Green LED (channel) Yellow LED (power supply)
Internal fuse	Supply: 1 A; Relay output: -
WAGO Basic Relay	857-152
Specialty functions	Without basic relay

Safety and protection

Rated voltage	50 V
Rated surge voltage	0.8 kV
Pollution degree	2
Dielectric strength (control/load circuit) (AC, 1 min)	4 kVrms
Dielectric strength (load/load circuit) (AC, 1 min)	1 kVrms

Compatibility

Siemens

Siemens S7-300	6ES7 322-1BF01-0AA0 6ES7 322-8BF00-0AB0 6ES7 323-1BH01-0AA0 6ES7 327-1BH00-0AB0 6ES7 326-2BF01-0AB0 6ES7 326-2BF10-0AB0
Siemens S7-1500	6ES7 522-1BF00-0AB0
Siemens ET200SP	6ES7 132-6BF00-0CA0 6ES7 132-6BF01-0AA0 6ES7 132-6BF01-0BA0

GE Fanuc

GE Fanuc 9030	IC693 MDL730 IC693 MDL732

Schneider	
Schneider Modicon TM3	TM3 DQ8T(G)
Schneider Modicon M340	BMX DDM 16022
Schneider Modicon Quantum	140 DDM 390 00
Schneider TSX	TSX DSY 08T2

Rockwell	
Rockwell Compact Logix	1769 - OB8

Omron	
Omron CJ1W	CJ1W-OD204

WAGO	
WAGO I/O System 750	750-1502
WAGO I/O System 753	753-530 (x1)

Connection data

Connection 1	
Connector	DIN 41651 connector; male connector
Pole number 1	10
Connection type 1	System
Mating direction	vertical

Connection 2	
Design 2	PCB terminal blocks (triple-deck)
Pole number 2	24
Connection type 2	Field
WAGO connector 2	WAGO 737 Series
Solid conductor 2	0.08 … 2.5 mm² / 28 … 12 AWG
Fine-stranded conductor 2	0.08 … 2.5 mm² / 28 … 12 AWG
Strip length 2	5 … 6 mm / 0.2 … 0.24 inches

Connection 3	
Design 3	PCB terminal blocks
Pole number 3	4
Connection type 3	Power supply
WAGO connector 3	WAGO 236 Series
Solid conductor 3	0.08 … 2.5 mm² / 28 … 12 AWG
Fine-stranded conductor 3	0.08 … 2.5 mm² / 28 … 12 AWG
Strip length 3	5 … 6 mm / 0.2 … 0.24 inches

Physical data

Width	70 mm / 2.756 inches
Height	105 mm / 4.134 inches
Depth from upper-edge of DIN-rail	65 mm / 2.559 inches

Mechanical data

Mounting type	DIN-35 rail

Material data

Fire load	1.304 MJ
Weight	130.9 g

Environmental requirements

Ambient temperature (operation)	-25 … +40 °C
Ambient temperature (storage)	-40 … +70 °C
Relative humidity	≤ 85% (non-condensing)

Commercial data

ETIM 8.0	EC002780
ETIM 7.0	EC002780
PU (SPU)	1 pcs
Packaging type	Box
Country of origin	DE
GTIN	4055144025279
Customs tariff number	85389091890

Environmental Product Compliance

RoHS Compliance Status	Compliant,No Exemption

Approvals / Certificates

Declarations of conformity and manufacturer's declarations

Approval	Standard	Certificate Name
EU-Declaration of Conformity WAGO GmbH & Co. KG	-	-
UK-Declaration of Conformity WAGO GmbH & Co. KG	-	-

Downloads

Environmental Product Compliance

Compliance Search

Environmental Product Compliance 704-5023

Documentation

System Description

WAGO System Wiring, Selection Guide	pdf 533.15 KB	

CAD/CAE-Data

 Continued on next page

CAD data

2D/3D Models
704-5023