Data Sheet | Item Number: 704-3004

Interface module for system wiring; for 232 Series Pluggable Connectors; 2 x 10-pole; 16-channel digital input or output; 2-wire connection; Double-deck PCB terminal blocks; for higher voltages; in mounting carrier

https://www.wago.com/704-3004

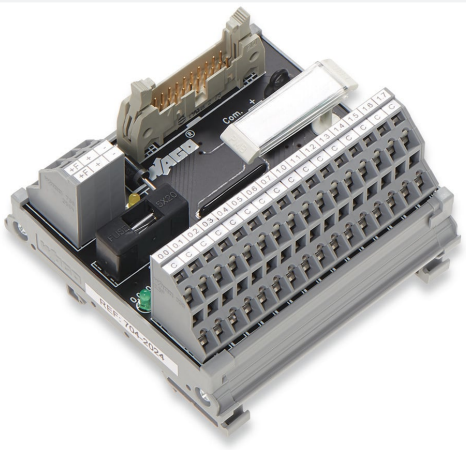

Similar to illustration

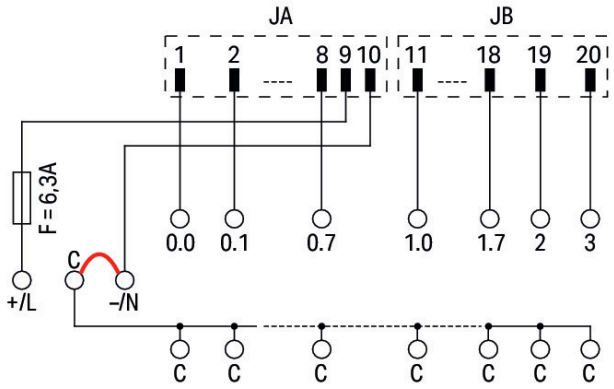

Electrical data

Inputs/outputs	16-channel digital input or output
Circuit type	2-wire connection
Nominal operating voltage	AC 230 V
Operating voltage range	±10 %
Total current	8 A
Limiting continuous current	3 A
Internal fuse	6.3 A

Safety and protection

Rated voltage	250 V
Rated surge voltage	2 kV

Compatibility

Siemens

Siemens S7-300	6ES7 321-1CH00-0AA0 6ES7 321-1CH20-0AA0 6ES7 321-1CH80-0AA0 6ES7 321-1EL00-0AA0 6ES7 321-1FH00-0AA0 6ES7 322-1FH00-0AA0 6ES7 322-1FL00-0AA0 6ES7 322-1HF10-0AA0 6ES7 322-1HH01-0AA0 6ES7 322-5GH00-0AB0
Siemens S7-400	6ES7 422-1HH00-0AA0
Siemens S7-1500	6ES7 521-1FH00-0AA0 6ES7 521-7EH00-0AB0 6ES7 522-5EH00-0AB0 6ES7 522-5FF00-0AB0 6ES7 522-5FH00-0AB0 6ES7 522-5HF00-0AB0 6ES7 522-5HH00-0AB0

GE Fanuc

GE Fanuc 9030	IC693 MDL240 IC693 MDL310 IC693 MDL340 IC693 MDL390 IC693 MDL734

Continued on next page

Schneider

Schneider Modicon M340	BMX DAI 1602 BMX DAI 1603 BMX DAI 1604 BMX DAO 1605 BMX DDI 1603 BMX DRA 0805 BMX DRA 1605
Schneider Modicon Quantum	140 DAI 340 00 140 DAI 353 00 140 DAI 440 00 140 DAI 453 00 140 DAI 540 00 140 DAI 543 00 140 DAI 553 00 140 DAI 740 00 140 DAI 753 00 140 DAO 840 00 140 DAO 840 10 140 DRA 840 00
Schneider TSX	TSX DEY 16A2 TSX DEY 16A3 TSX DEY 16A4 TSX DEY 16A5 TSX DEY 16D3 TSX DSY 08R4 TSX DSY 08R5 TSX DSY 08R5A TSX DSY 16R5 TSX DSY 16S4 TSX DSY 16S5

Rockwell

Rockwell Compact Logix	1769 - IA16 1769 - IM12 1769 - IQ6XOW4 1769 - OA16 1769 - OW8I 1769 - OW16
Rockwell Control Logix	1756 - IA16I 1756 - IB16ISOE 1756 - IH16I 1756 - IM16I 1756 - OA16I 1756 - OH8I 1756 - OW16I 1756 - OX8I

Connection data

Connection 1

Connector	WAGO 231 Series
Design	PCB terminal blocks
Pole number 1	20
Connection type 1	System
WAGO connector	WAGO 232 Series
Solid conductor	0.08 … 2.5 mm² / 28 … 12 AWG
Fine-stranded conductor	0.08 … 2.5 mm² / 28 … 12 AWG
Note (conductor cross-section)	12 AWG: THHN, THWN
Strip length	8 … 9 mm / 0.31 … 0.35 inches
Mating direction	vertical

Connection 2

Design 2	PCB terminal blocks (double-deck)
Pole number 2	32
Connection type 2	Field
WAGO connector 2	WAGO 736 Series
Solid conductor 2	0.08 … 2.5 mm² / 28 … 12 AWG
Fine-stranded conductor 2	0.08 … 2.5 mm² / 28 … 12 AWG
Strip length 2	5 … 6 mm / 0.2 … 0.24 inches

Connection 3

Design 3	PCB terminal blocks
Pole number 3	3
Connection type 3	Power supply
WAGO connector 3	WAGO 742 Series
Solid conductor 3	0.08 … 2.5 mm² / 28 … 12 AWG
Fine-stranded conductor 3	0.08 … 2.5 mm² / 28 … 12 AWG
Strip length 3	8 … 9 mm / 0.31 … 0.35 inches

Continued on next page

Physical data

Width	111 mm / 4.37 inches
Height	85 mm / 3.346 inches
Depth from upper-edge of DIN-rail	56 mm / 2.204 inches

Mechanical data

Mounting type	DIN-35 rail

Material data

Fire load	2.872 MJ
Weight	170 g

Environmental requirements

Ambient temperature (operation)	-20 … +50 °C
Ambient temperature (storage)	-40 … +70 °C
Relative humidity	≤ 85% (non-condensing)

Commercial data

Product Group	30 (WAGO France)
ETIM 8.0	EC002780
ETIM 7.0	EC002780
PU (SPU)	1 pcs
Packaging type	Box
Country of origin	FR
GTIN	4050821220541
Customs tariff number	85369010000

Environmental Product Compliance

RoHS Compliance Status	Compliant,No Exemption

Approvals / Certificates

General approvals

Approval	Standard	Certificate Name
EAC Brjansker Zertifizierungs-stelle	TP TC 004/2011	EAC RU C-DE.AM02.B.00122/19

Downloads

Environmental Product Compliance

Compliance Search
Environmental Product Compliance 704-3004

Documentation

System Description		
WAGO System Wiring, Selection Guide	pdf 533.15 KB	