Data Sheet | Item Number: 704-2063

Interface module for system wiring; Pluggable connector per DIN 41651; Male connector; 10-pole; 8-channel digital input or output; 3-wire connection; with disconnect terminal block; in mounting carrier

https://www.wago.com/704-2063

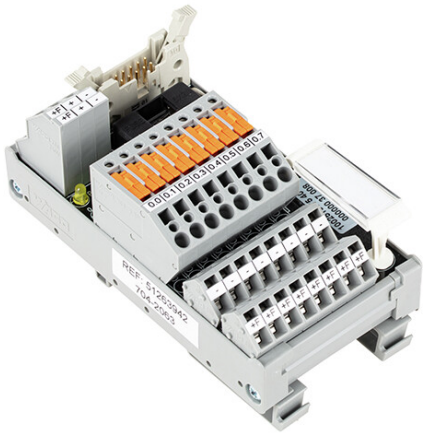

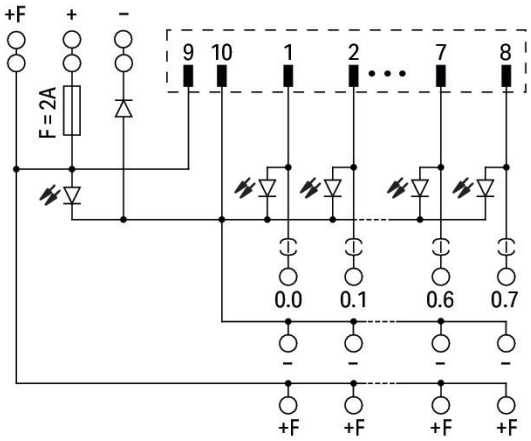

Electrical data

Inputs/outputs	8-channel digital input or output
Circuit type	3-wire connection
Nominal operating voltage	DC 24 V
Operating voltage range	±10 %
Current consumption (status indication)	5 mA
Total current	2 A
Limiting continuous current	1 A
Status indicator	Green LED (channel) Yellow LED (power supply)
Internal fuse	2 A
Specialty functions	With disconnect/test terminal blocks

Safety and protection

Rated voltage	50 V
Rated surge voltage	0.8 kV
Pollution degree	2

Compatibility

Siemens

Siemens S7-300	6ES7 313-5BE01-0AB0 6ES7 313-5BG04-0AB0 6ES7 314-6BF01-0AB0 6ES7 314-6BG03-0AB0 6ES7 314-6CF01-0AB0 6ES7 314-6CG03-0AB0 6ES7 322-1BF01-0AA0 6ES7 322-8BF00-0AB0 6ES7 323-1BH01-0AA0 6ES7 326-2BF01-0AB0 6ES7 326-2BF10-0AB0 6ES7 327-1BH00-0AB0
Siemens S7-1500	6ES7 522-1BF00-0AB0

Siemens

Siemens ET200SP	6ES7 131-6BF00-0CA0 6ES7 131-6BF00-0DA0 6ES7 131-6BF00-2CA0 6ES7 131-6BF01-0AA0 6ES7 131-6BF01-0BA0 6ES7 131-6BF01-2AA0 6ES7 131-6BF01-2BA0 6ES7 131-6BF61-0AA0 6ES7 132-6BF00-0CA0 6ES7 132-6BF01-0AA0 6ES7 132-6BF01-0BA0

Continued on next page

GE Fanuc

GE Fanuc 9030	IC693 MDL634 IC693 MDL730 IC693 MDL732

Schneider

Schneider Modicon TM3	TM3 DI8(G) TM3 DQ8T(G)
Schneider Modicon M340	BMX DDM 16022 BMX DDM 16025
Schneider Modicon Quantum	140 DDM 390 00
Schneider TSX	TSX DEY 08D2 TSX DSY 08T2

Rockwell

Rockwell Compact Logix	1769 - OB8

Omron

Omron CJ1W	CJ1W-ID201 CJ1W-OD204

WAGO

WAGO I/O System 750	750-1502
WAGO I/O System 753	753-430 (x1) 753-431 (x1) 753-530 (x1)

Connection data

Connection 1

Connector	DIN 41651 connector; male connector
Pole number 1	10
Connection type 1	System
Mating direction	vertical

Connection 2

Design 2	PCB terminal blocks
Pole number 2	8
Connection type 2	Field
WAGO connector 2	WAGO 742 Series
Solid conductor 2	0.08 … 2.5 mm² / 28 … 12 AWG
Fine-stranded conductor 2	0.08 … 2.5 mm² / 28 … 12 AWG
Strip length 2	8 … 9 mm / 0.31 … 0.35 inches

Connection 3

Design 3	PCB terminal blocks
Pole number 3	16
Connection type 3	Field
WAGO connector 3	WAGO 236 Series
Solid conductor 3	0.08 … 2.5 mm² / 28 … 12 AWG
Fine-stranded conductor 3	0.08 … 2.5 mm² / 28 … 12 AWG
Strip length 3	5 … 6 mm / 0.2 … 0.24 inches

Connection 4

Design 4	PCB terminal blocks (double-deck)
Pole number 4	24
Connection type 4	Power supply
WAGO connector 4	WAGO 736 Series
Solid conductor 4	0.08 … 2.5 mm² / 28 … 12 AWG
Fine-stranded conductor 4	0.08 … 2.5 mm² / 28 … 12 AWG
Strip length 4	5 … 6 mm / 0.2 … 0.24 inches

Physical data

Width	56 mm / 2.205 inches
Height	105 mm / 4.133 inches
Depth from upper-edge of DIN-rail	63 mm / 2.48 inches

Continued on next page

Mechanical data

Mounting type	DIN-35 rail

Material data

Fire load	1.704 MJ
Weight	114.4 g

Environmental requirements

Ambient temperature (operation)	-20 … +50 °C
Ambient temperature (storage)	-40 … +70 °C
Relative humidity	≤ 85% (non-condensing)

Commercial data

ETIM 8.0	EC002780
ETIM 7.0	EC002780
PU (SPU)	1 pcs
Packaging type	Box
Country of origin	DE
GTIN	4055143982672
Customs tariff number	85369010000

Environmental Product Compliance

RoHS Compliance Status	Compliant,No Exemption

Downloads

Environmental Product Compliance

Compliance Search

Environmental Product Compliance 704-2063

Documentation

System Description

WAGO System Wiring, Selection Guide	pdf 533.15 KB	