Data Sheet | Item Number: 216-1535

Twin ferrule; Sleeve for 2 x 2.5 mm / AWG 14; insulated; blue

https://www.wago.com/216-1535



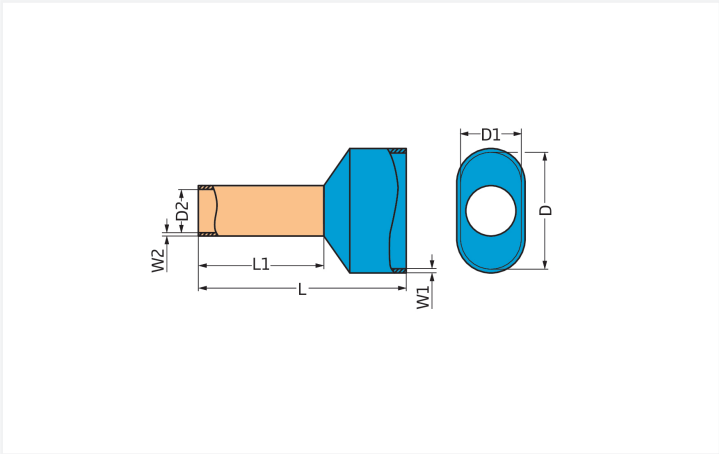

Color: blue

Connection Data	
Strip length	12 … 13 mm / 0.47 … 0.51 inches
Metric cross-section of the twin ferrule	2 x 2,5 mm²
Cross-section (AWG) of twin ferrule	2 x 14 AWG

Physical data	
Total length	19 mm
Wall thickness of crimp sleeve	0.2 mm
Wall thickness (plastic collar)	0.4 mm
Inner dimension of small plastic collar	4.5 mm
Inner dimension plastic collar large	8 mm
Crimp length (length of sleeve)	10 mm
Diameter crimp sleeve inside	2.9 mm

Mechanical data	
Plastic collar	Standard collar

Material data	
Color	blue
Fire load	0 MJ
Weight	0.3 g

Commercial data

PU (SPU)	500 pcs
Packaging type	Bag
Country of origin	DE
GTIN	4055143582018
Customs tariff number	85369010000

Product Classification

UNSPSC	39121405
ETIM 9.0	EC000005
ETIM 10.0	EC000005
ECCN	NO US CLASSIFICATION

Environmental Product Compliance

RoHS Compliance Status	Compliant,No Exemption

Downloads

Environmental Product Compliance

Compliance Search

Environmental Product Compliance 216-1535

Installation Notes

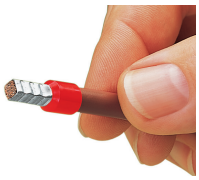

A perfect gas-tight crimp – both electrically and mechanically reliable