Data Sheet | Item Number: 216-1261

Ferrule; insulated; white

https://www.wago.com/216-1261



Color: white

Similar to illustration

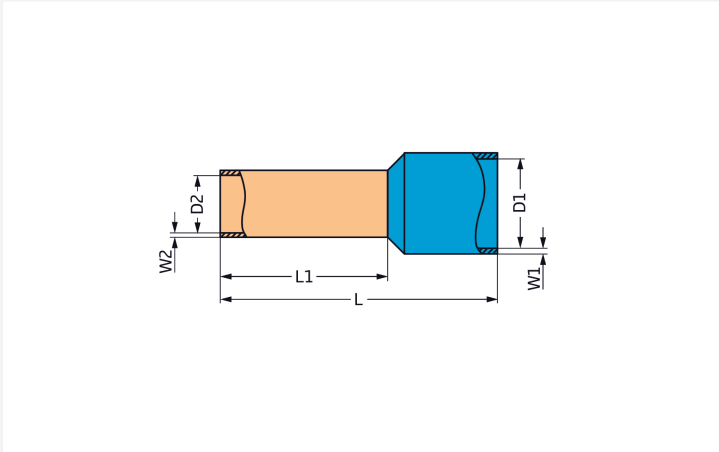

Dimensions in mm

Connection Data

Metric cross-section of the ferrule	0.5 mm²
Strip length	14 … 15 mm / 0.55 … 0.59 inches
Cross-section (AWG) of ferrule	20 AWG

Physical data

Total length	18 mm
Wall thickness of crimp sleeve	0.15 mm
Wall thickness (plastic collar)	0.25 mm
Crimp length (length of sleeve)	12 mm
Inner diameter of plastic collar	2.6 mm
Diameter crimp sleeve inside	1 mm

Mechanical data

Plastic collar	Standard collar

Material data

Color	white
Fire load	0 MJ
Weight	0.1 g

Commercial data

PU (SPU)	1000 pcs
Packaging type	Bag
GTIN	4055143570503
Customs tariff number	85369010000

Product Classification

UNSPSC	39121405
ETIM 9.0	EC000005
ETIM 10.0	EC000005
ECCN	NO US CLASSIFICATION

Environmental Product Compliance

RoHS Compliance Status	Compliant,No Exemption

Downloads

Environmental Product Compliance

Compliance Search

Environmental Product Compliance 216-1261

Installation Notes

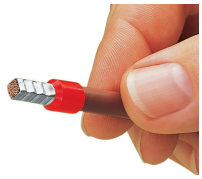

A perfect gas-tight crimp – both electrically and mechanically reliable