Standard SMD LED PLCC-2

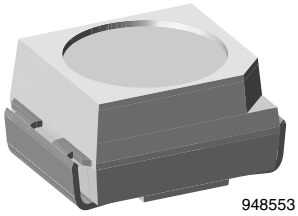
948553

DESCRIPTION

These devices have been designed to meet the increasing demand for surface mounting technology.

The package of the VLM.310. is the PLCC-2.

It consists of a lead frame which is embedded in a white thermoplast. The reflector inside this package is filled up with clear epoxy.

PRODUCT GROUP AND PACKAGE DATA

- Product group: LED
- Package: SMD PLCC-2
- Product series: standard
- Angle of half intensity: ± 60°

FEATURES

- SMD LEDs with exceptional brightness
- Luminous intensity categorized
- Compatible with automatic placement equipment
- EIA and ICE standard package
- Compatible with infrared, vapor phase and wave solder processes according to CECC 00802 and J-STD-020
- Available in 8 mm tape
- Low profile package
- Non-diffused lens: Excellent for coupling to light pipes and backlighting
- Low power consumption
- Luminous intensity ratio in one packaging unit $I_{Vmax.}/I_{Vmin.} \leq 1.6$
- Preconditioning according to JEDEC® level 2a
- AEC-Q101 qualified
- Material categorization: For definitions of compliance please see www.vishay.com/doc?99912

AUTOMOTIVE GRADE

Pb-free

e3

RoHS COMPLIANT

HALOGEN FREE GREEN (5-2008)

APPLICATIONS

- Automotive: Backlighting in dashboards, and switches
- Telecommunication: Indicator and backlighting in telephone and fax
- Indicator and backlight for audio and video equipment
- Indicator and backlight in office equipment
- Flat backlight for LCDs, switches, and symbols
- General use

PARTS TABLE

PART	COLOR	LUMINOUS INTENSITY (mcd)			at I_F (mA)	WAVELENGTH (nm)			at I_F (mA)	FORWARD VOLTAGE (V)			at I_F (mA)	TECHNOLOGY
		MIN.	TYP.	MAX.		MIN.	TYP.	MAX.		MIN.	TYP.	MAX.		
VLMH3100-GS08	Amber	2.8	10	-	10	612	-	625	10	-	2	2.8	20	GaAsP on GaP
VLMH3100-GS18	Amber	2.8	10	-	10	612	-	625	10	-	2	2.8	20	GaAsP on GaP
VLMH3101-GS08	Amber	4.5	-	11.2	10	612	-	625	10	-	2	2.8	20	GaAsP on GaP
VLMH3101-GS18	Amber	4.5	-	11.2	10	612	-	625	10	-	2	2.8	20	GaAsP on GaP
VLMH3102-GS08	Amber	7.1	-	18	10	612	-	625	10	-	2	2.8	20	GaAsP on GaP
VLMH3102-GS18	Amber	7.1	-	18	10	612	-	625	10	-	2	2.8	20	GaAsP on GaP
VLMO3100-GS08	Soft orange	2.8	8	-	10	598	-	611	10	-	2	2.8	20	GaAsP on GaP
VLMO3100-GS18	Soft orange	2.8	8	-	10	598	-	611	10	-	2	2.8	20	GaAsP on GaP
VLMO3101-GS08	Soft orange	4.5	-	11.2	10	598	-	611	10	-	2	2.8	20	GaAsP on GaP
VLMO3101-GS18	Soft orange	4.5	-	11.2	10	598	-	611	10	-	2	2.8	20	GaAsP on GaP
VLMY3100-GS08	Yellow	2.8	10		10	581	-	594	10	-	2.1	2.8	20	GaAsP on GaP
VLMY3100-GS18	Yellow	2.8	10		10	581	-	594	10	-	2.1	2.8	20	GaAsP on GaP
VLMY3101-GS08	Yellow	4.5	-	11.2	10	581	-	594	10	-	2.1	2.8	20	GaAsP on GaP
VLMY3101-GS18	Yellow	4.5	-	11.2	10	581	-	594	10	-	2.1	2.8	20	GaAsP on GaP
VLMY3102-GS08	Yellow	7.1	-	18	10	581	-	594	10	-	2.1	2.8	20	GaAsP on GaP
VLMY3102-GS18	Yellow	7.1	-	18	10	581	-	594	10	-	2.1	2.8	20	GaAsP on GaP

For technical questions, contact: LED@vishay.com
THIS DOCUMENT IS SUBJECT TO CHANGE WITHOUT NOTICE. THE PRODUCTS DESCRIBED HEREIN AND THIS DOCUMENT ARE SUBJECT TO SPECIFIC DISCLAIMERS, SET FORTH AT www.vishay.com/doc?91000

PARTS TABLE

PART	COLOR	LUMINOUS INTENSITY (mcd)			at I_F (mA)	WAVELENGTH (nm)			at I_F (mA)	FORWARD VOLTAGE (V)			at I_F (mA)	TECHNOLOGY
		MIN.	TYP.	MAX.		MIN.	TYP.	MAX.		MIN.	TYP.	MAX.		
VLMG3100-GS08	Green	4.5	16	-	10	562	-	575	10	-	2.2	2.8	20	GaP on GaP
VLMG3100-GS18	Green	4.5	16	-	10	562	-	575	10	-	2.2	2.8	20	GaP on GaP
VLMG3102-GS08	Green	11.2	-	18	10	562	-	575	10	-	2.2	2.8	20	GaP on GaP
VLMG3102-GS18	Green	11.2	-	18	10	562	-	575	10	-	2.2	2.8	20	GaP on GaP
VLMG3105-GS08	Green	7.1	-	18	10	562	-	575	10	-	2.2	2.8	20	GaP on GaP
VLMG3105-GS18	Green	7.1	-	18	10	562	-	575	10	-	2.2	2.8	20	GaP on GaP
VLMP3100-GS08	Pure green	1.12	4	-	10	555	-	565	10	-	2.1	2.8	20	GaP on GaP
VLMP3100-GS18	Pure green	1.12	4	-	10	555	-	565	10	-	2.1	2.8	20	GaP on GaP
VLMP3101-GS08	Pure green	1.8	-	4.5	10	555	-	565	10	-	2.1	2.8	20	GaP on GaP
VLMP3101-GS18	Pure green	1.8	-	4.5	10	555	-	565	10	-	2.1	2.8	20	GaP on GaP
VLMP3107-GS08	Pure green	2.8	-	7.1	10	555	-	565	10	-	2.1	2.8	20	GaP on GaP
VLMP3107-GS18	Pure green	2.8	-	7.1	10	555	-	565	10	-	2.1	2.8	20	GaP on GaP
VLMP3102-GS08	Pure green	2.8	-	5.6	10	555	-	565	10	-	2.1	2.8	20	GaP on GaP
VLMP3102-GS18	Pure green	2.8	-	5.6	10	555	-	565	10	-	2.1	2.8	20	GaP on GaP

ABSOLUTE MAXIMUM RATINGS (T_{amb} = 25 °C, unless otherwise specified)
VLMG310. ,VLMH310. ,VLMO310. ,VLMP310. ,VLMY310.

PARAMETER	TEST CONDITION	SYMBOL	VALUE	UNIT
Reverse voltage		V_R	6	V
DC forward current	$T_{amb} \leq 60$ °C	I_F	30	mA
Surge forward current	$t_p \leq 10$ µs	I_{FSM}	0.5	A
Power dissipation	$T_{amb} \leq 60$ °C	P_V	100	mW
Junction temperature		T_j	100	°C
Operating temperature range		T_{amb}	-40 to +100	°C
Storage temperature range		T_{stg}	-40 to +100	°C
Soldering temperature	t ≤ 5 s	T_{sd}	260	°C
Thermal resistance junction/ambient	Mounted on PC board (pad size > 16 mm²)	R_{thJA}	400	K/W

OPTICAL AND ELECTRICAL CHARACTERISTICS (T_{amb} = 25 °C, unless otherwise specified)
VLMH310., AMBER

PARAMETER	TEST CONDITION	PART	SYMBOL	MIN.	TYP.	MAX.	UNIT
Luminous intensity (1)	I_F = 10 mA	VLMH3100	I_V	2.8	10	-	mcd
		VLMH3101	I_V	4.5	-	11.2	mcd
		VLMH3102	I_V	7.1	-	18	mcd
Dominant wavelength	I_F = 10 mA		λ_d	612	-	625	nm
Peak wavelength	I_F = 10 mA		λ_p	-	635	-	nm
Angle of half intensity	I_F = 10 mA		φ	-	± 60	-	deg
Forward voltage	I_F = 20 mA		V_F	-	2	2.8	V
Reverse voltage	I_R = 10 µA		V_R	6	15	-	V
Junction capacitance	V_R = 0 V, f = 1 MHz		C_j	-	15	-	pF

Note

(1) In one packing unit $I_{Vmax.}/I_{Vmin.} \leq 1.6$

For technical questions, contact: LED@vishay.com
THIS DOCUMENT IS SUBJECT TO CHANGE WITHOUT NOTICE. THE PRODUCTS DESCRIBED HEREIN AND THIS DOCUMENT ARE SUBJECT TO SPECIFIC DISCLAIMERS, SET FORTH AT www.vishay.com/doc?91000

OPTICAL AND ELECTRICAL CHARACTERISTICS (T_{amb} = 25 °C, unless otherwise specified)
VLMO310., SOFT ORANGE

PARAMETER	TEST CONDITION	PART	SYMBOL	MIN.	TYP.	MAX.	UNIT
Luminous intensity (1)	I_F = 10 mA	VLMO3100	I_V	2.8	8	-	mcd
		VLMO3101	I_V	4.5	-	11.2	mcd
Dominant wavelength	I_F = 10 mA		λ_d	598	-	611	nm
Peak wavelength	I_F = 10 mA		λ_p	-	605	-	nm
Angle of half intensity	I_F = 10 mA		φ	-	± 60	-	deg
Forward voltage	I_F = 20 mA		V_F	-	2	2.8	V
Reverse voltage	I_R = 10 µA		V_R	6	15	-	V
Junction capacitance	V_R = 0 V, f = 1 MHz		C_j	-	15	-	pF

Note
(1) In one packing unit $I_{Vmax.}/I_{Vmin.} \leq 1.6$

OPTICAL AND ELECTRICAL CHARACTERISTICS (T_{amb} = 25 °C, unless otherwise specified)
VLMY310., YELLOW

PARAMETER	TEST CONDITION	PART	SYMBOL	MIN.	TYP.	MAX.	UNIT
Luminous intensity (1)	I_F = 10 mA	VLMY3100	I_V	2.8	10		mcd
		VLMY3101	I_V	4.5	-	11.2	mcd
		VLMY3102	I_V	7.1	-	18	mcd
Dominant wavelength	I_F = 10 mA		λ_d	581	-	594	nm
Peak wavelength	I_F = 10 mA		λ_p	-	585	-	nm
Angle of half intensity	I_F = 10 mA		φ	-	± 60	-	deg
Forward voltage	I_F = 20 mA		V_F	-	2.1	2.8	V
Reverse voltage	I_R = 10 µA		V_R	6	15	-	V
Junction capacitance	V_R = 0 V, f = 1 MHz		C_j	-	15	-	pF

Note
(1) In one packing unit $I_{Vmax.}/I_{Vmin.} \leq 1.6$

OPTICAL AND ELECTRICAL CHARACTERISTICS (T_{amb} = 25 °C, unless otherwise specified)
VLMG310., GREEN

PARAMETER	TEST CONDITION	PART	SYMBOL	MIN.	TYP.	MAX.	UNIT
Luminous intensity (1)	I_F = 10 mA	VLMG3100	I_V	4.5	16	-	mcd
		VLMG3102	I_V	11.2	-	18	mcd
		VLMG3105	I_V	7.1	-	18	mcd
Dominant wavelength	I_F = 10 mA		λ_d	562	-	575	nm
Peak wavelength	I_F = 10 mA		λ_p	-	565	-	nm
Angle of half intensity	I_F = 10 mA		φ	-	± 60	-	deg
Forward voltage	I_F = 20 mA		V_F	-	2.2	2.8	V
Reverse voltage	I_R = 10 µA		V_R	6	15	-	V
Junction capacitance	V_R = 0 V, f = 1 MHz		-	-	15	-	pF

Note
(1) In one packing unit $I_{Vmax.}/I_{Vmin.} \leq 1.6$

For technical questions, contact: LED@vishay.com
THIS DOCUMENT IS SUBJECT TO CHANGE WITHOUT NOTICE. THE PRODUCTS DESCRIBED HEREIN AND THIS DOCUMENT ARE SUBJECT TO SPECIFIC DISCLAIMERS, SET FORTH AT www.vishay.com/doc?91000

OPTICAL AND ELECTRICAL CHARACTERISTICS (T_{amb} = 25 °C, unless otherwise specified)
VLMP310., PURE GREEN

PARAMETER	TEST CONDITION	PART	SYMBOL	MIN.	TYP.	MAX.	UNIT
Luminous intensity (1)	I_F = 10 mA	VLMP3100	I_V	1.12	4	-	mcd
		VLMP3101	I_V	1.8	-	4.5	mcd
		VLMP3102	I_V	2.8	-	7.1	mcd
		VLMP3107	I_V	2.8	-	5.6	mcd
Dominant wavelength	I_F = 10 mA		λ_d	555	-	565	nm
Peak wavelength	I_F = 10 mA		λ_p	-	555	-	nm
Angle of half intensity	I_F = 10 mA		φ	-	± 60	-	deg
Forward voltage	I_F = 20 mA		V_F	-	2.1	2.8	V
Reverse voltage	I_R = 10 µA		V_R	6	15	-	V
Junction capacitance	V_R = 0 V, f = 1 MHz		C_j	-	15	-	pF

Note

(1) In one packing unit $I_{Vmax.}/I_{Vmin.} \leq 1.6$

COLOR CALSSIFICATION

GROUP	YELLOW		GREEN		SOFT ORANGE		PURE GREEN	
	DOM. WAVELENGTH (nm)				DOM. WAVELENGTH (nm)			
	MIN.	MAX.	MIN.	MAX.	MIN.	MAX.	MIN.	MAX.
0							555	559
1	581	584			598	601	558	561
2	583	586			600	603	560	563
3	585	588			602	605	562	565
4	587	590	564	567	604	607		
5	589	592	566	569	606	609		
6	591	594	568	571	608	611		
7			570	573				
8			572	575				

Note

- Wavelengths are tested at a current pulse duration of 25 ms.

LUMINOUS INTENSITY CLASSIFICATION

GROUP	LIGHT INTENSITY (mcd)		
STANDARD	OPTIONAL	MIN.	MAX.
F	-	-	-
	2	1.40	1.80
G	1	1.80	2.24
	2	2.24	2.80
H	1	2.80	3.55
	2	3.55	4.50
J	1	4.50	5.60
	2	5.60	7.10
K	1	7.10	9.00
	2	9.00	11.20
L	1	11.20	14.00
	2	14.00	18.00
M	1	18.00	22.40
	2	22.40	28.00

Note

- Luminous intensity is tested at a current pulse duration of 25 ms and an accuracy of ± 11 %.
  The above type numbers represent the order groups which include only a few brightness groups. Only one group will be shipped on each reel (there will be no mixing of two groups on each reel).
  In order to ensure availability, single brightness groups will not be orderable.
  In a similar manner for colors where wavelength groups are measured and binned, single wavelength groups will be shipped on any one reel.
  In order to ensure availability, single wavelength groups will not be orderable.

For technical questions, contact: LED@vishay.com
THIS DOCUMENT IS SUBJECT TO CHANGE WITHOUT NOTICE. THE PRODUCTS DESCRIBED HEREIN AND THIS DOCUMENT ARE SUBJECT TO SPECIFIC DISCLAIMERS, SET FORTH AT www.vishay.com/doc?91000

CROSSING TABLE		
VISHAY	**OSRAM**	**STANLEY**
VLMH3100	-	-
VLMH3101	-	-
VLMH3102	-	-
VLMO3100	LOT670J1L2	-
VLMO3101	LOT670J1K2	-
VLMY3100	LYT670J1L2	-
VLMY3101	LYT670J1K2	-
VLMY3102	LYT670K1L2	-
VLMG3100	LGT670K1M2	VYBG1104B
VLMG3102	LGT670L1L2	-
VLMG3105	LGT671K1L2	-
VLMP3100	LPT670F2J2	-
VLMP3101	LPT670G1H2	VYBG1101W
VLMP3102	LPT670H1J2	-
VLMP3107	LPT670H1J1	-

TYPICAL CHARACTERISTICS (T_{amb} = 25 °C, unless otherwise specified)

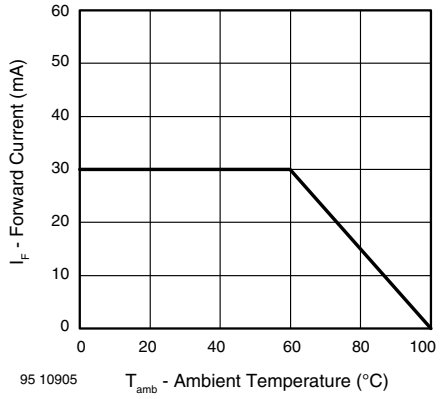

Fig. 1 - Maximum Permissible Forward Current vs. Ambient Temperature

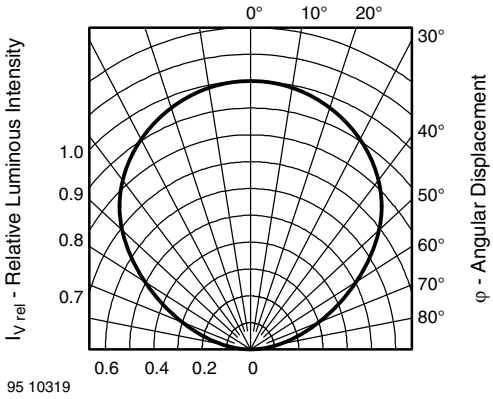

Fig. 3 - Relative Luminous Intensity vs. Angular Displacement

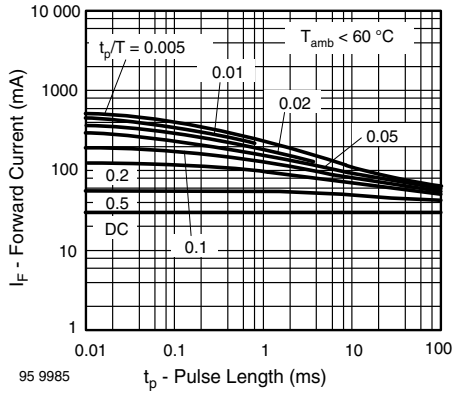

Fig. 2 - Permissible Pulse Forward Current vs. Pulse Duration

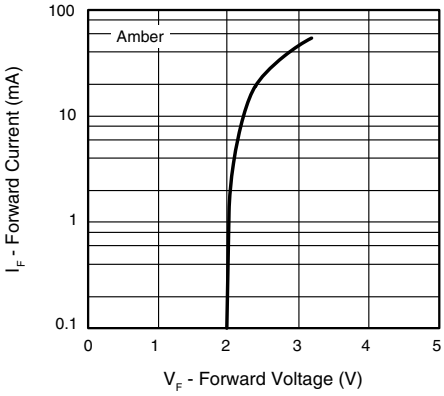

Fig. 4 - Forward Current vs. Forward Voltage

For technical questions, contact: LED@vishay.com
THIS DOCUMENT IS SUBJECT TO CHANGE WITHOUT NOTICE. THE PRODUCTS DESCRIBED HEREIN AND THIS DOCUMENT ARE SUBJECT TO SPECIFIC DISCLAIMERS, SET FORTH AT www.vishay.com/doc?91000

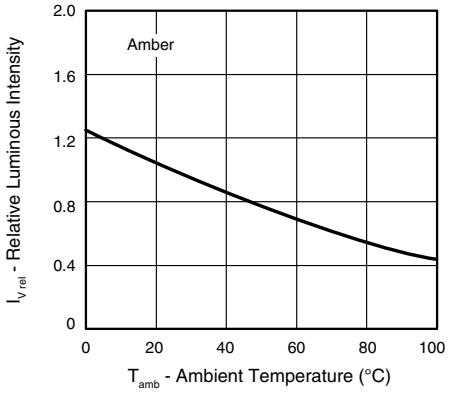

Fig. 5 - Relative Luminous Intensity vs. Ambient Temperature

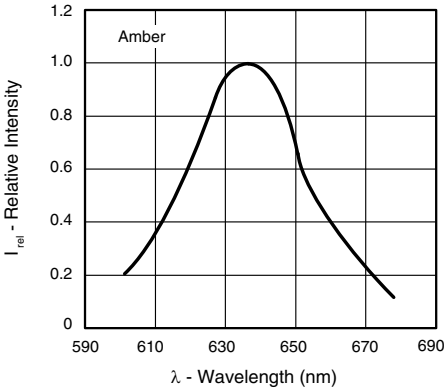

Fig. 8 - Relative Intensity vs. Wavelength

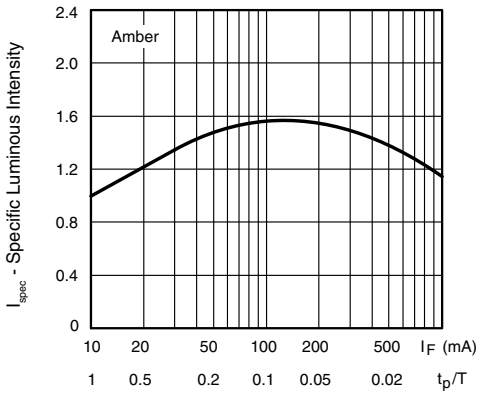

Fig. 6 - Specific Luminous Intensity vs. Forward Current/Duty Cycle

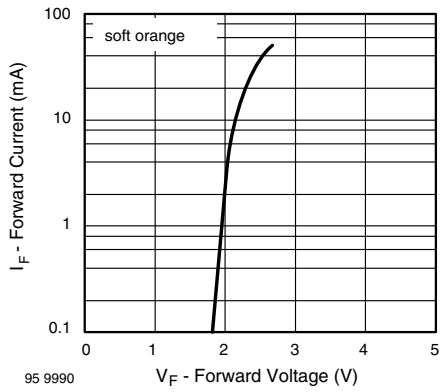

Fig. 9 - Forward Current vs. Forward Voltage

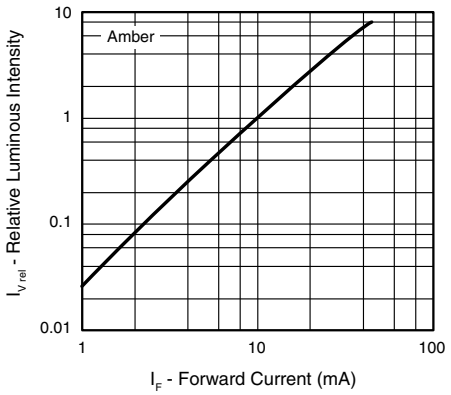

Fig. 7 - Relative Luminous Intensity vs. Forward Current

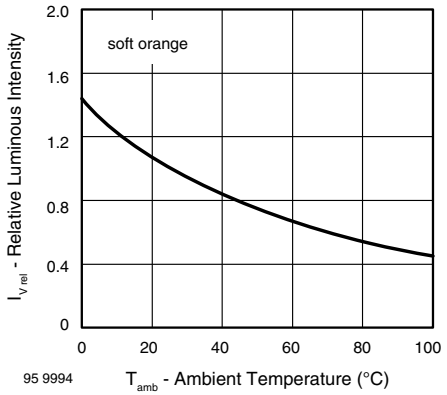

Fig. 10 - Relative Luminous Intensity vs. Ambient Temperature

For technical questions, contact: LED@vishay.com
THIS DOCUMENT IS SUBJECT TO CHANGE WITHOUT NOTICE. THE PRODUCTS DESCRIBED HEREIN AND THIS DOCUMENT ARE SUBJECT TO SPECIFIC DISCLAIMERS, SET FORTH AT www.vishay.com/doc?91000

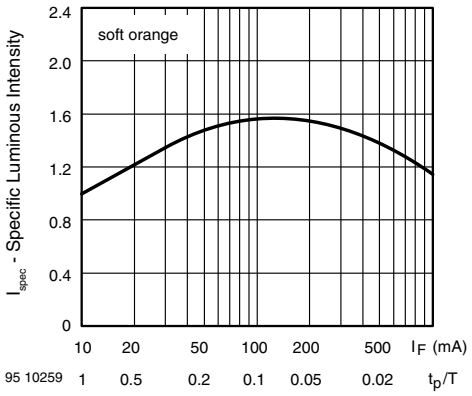

Fig. 11 - Specific Luminous Intensity vs. Forward Current/Duty Cycle

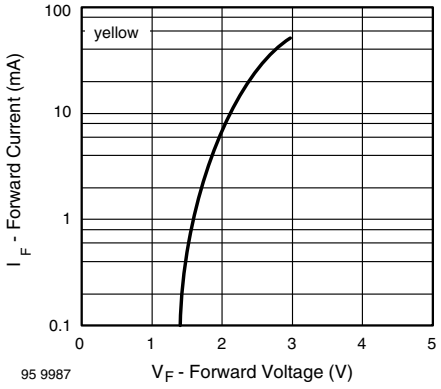

Fig. 14 - Forward Current vs. Forward Voltage

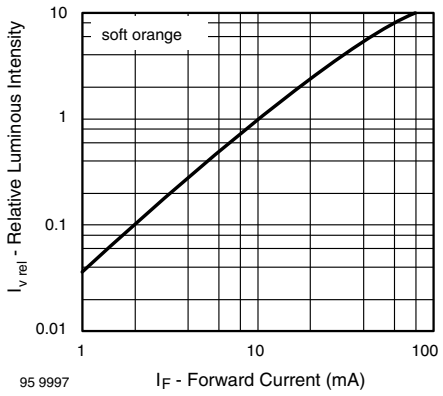

Fig. 12 - Relative Luminous Intensity vs. Forward Current

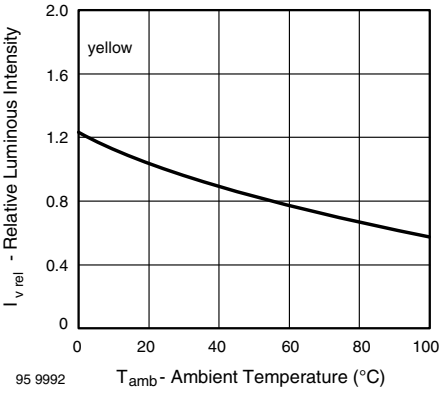

Fig. 15 - Relative Luminous Intensity vs. Ambient Temperature

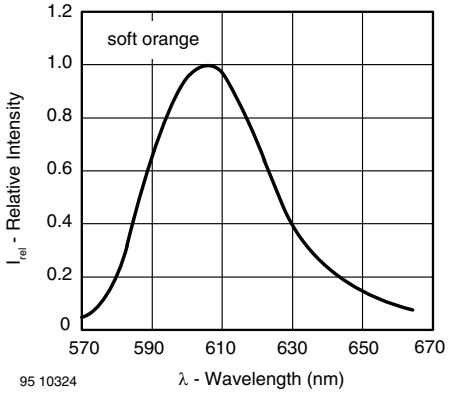

Fig. 13 - Relative Intensity vs. Wavelength

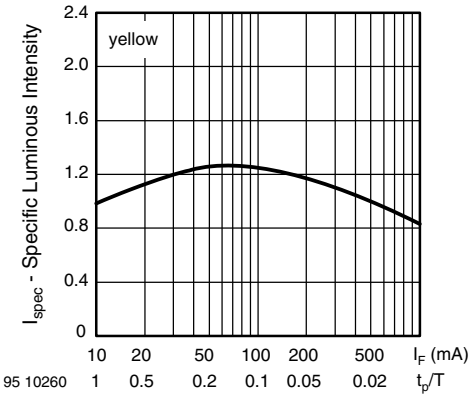

Fig. 16 - Specific Luminous Intensity vs. Forward Current/Duty Cycle

For technical questions, contact: LED@vishay.com
THIS DOCUMENT IS SUBJECT TO CHANGE WITHOUT NOTICE. THE PRODUCTS DESCRIBED HEREIN AND THIS DOCUMENT ARE SUBJECT TO SPECIFIC DISCLAIMERS, SET FORTH AT www.vishay.com/doc?91000

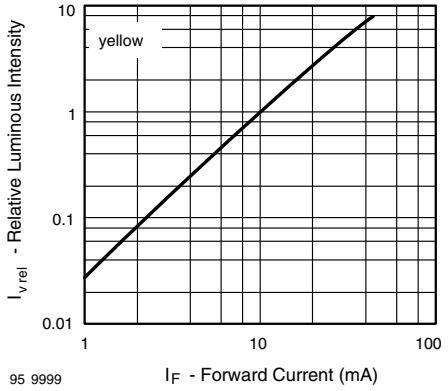

Fig. 17 - Relative Luminous Intensity vs. Forward Current

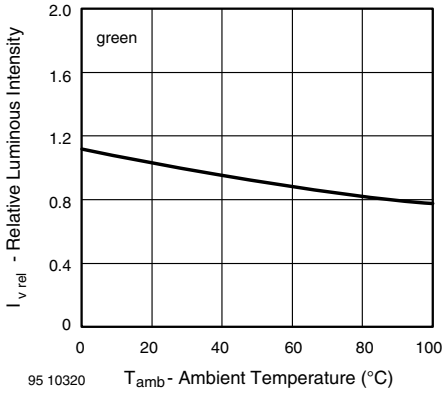

Fig. 20 - Relative Luminous Intensity vs. Ambient Temperature

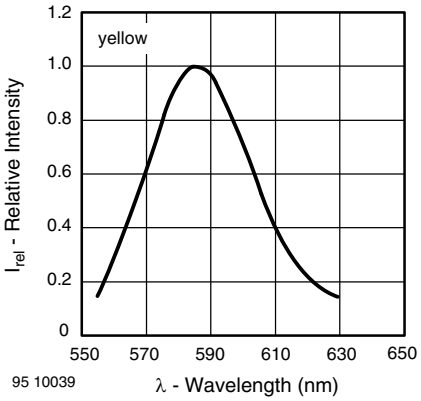

Fig. 18 - Relative Intensity vs. Wavelength

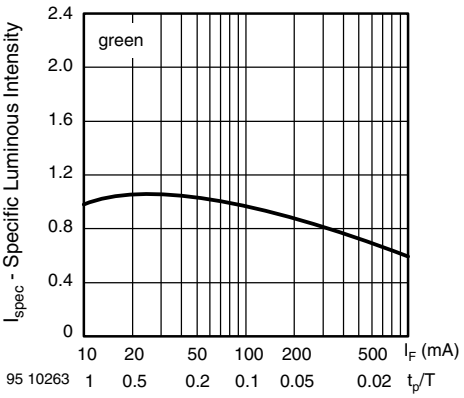

Fig. 21 - Specific Luminous Intensity vs. Forward Current

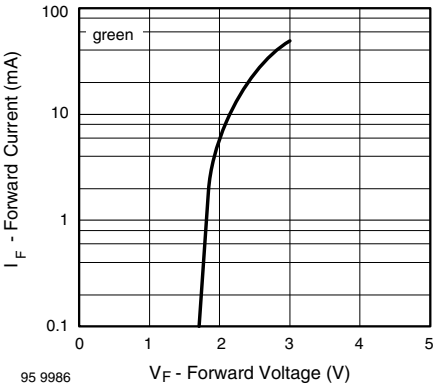

Fig. 19 - Forward Current vs. Forward Voltage

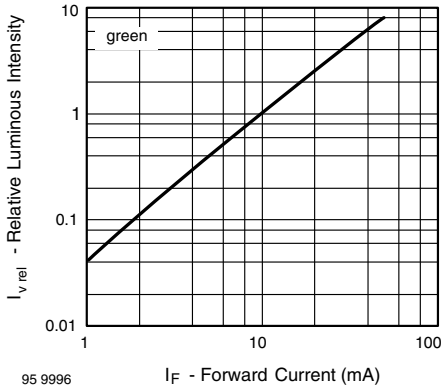

Fig. 22 - Relative Luminous Intensity vs. Forward Current

For technical questions, contact: LED@vishay.com
THIS DOCUMENT IS SUBJECT TO CHANGE WITHOUT NOTICE. THE PRODUCTS DESCRIBED HEREIN AND THIS DOCUMENT ARE SUBJECT TO SPECIFIC DISCLAIMERS, SET FORTH AT www.vishay.com/doc?91000

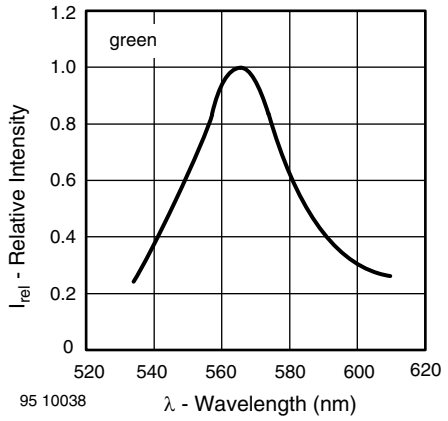

Fig. 23 - Relative Intensity vs. Wavelength

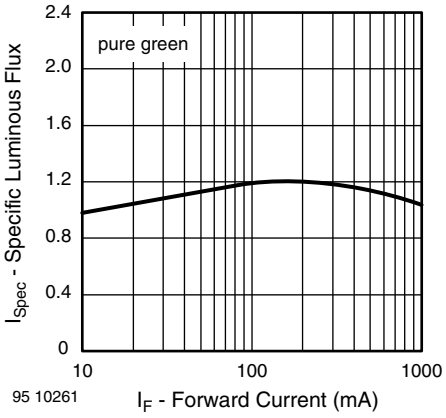

Fig. 26 - Specific Luminous Intensity vs. Forward Current

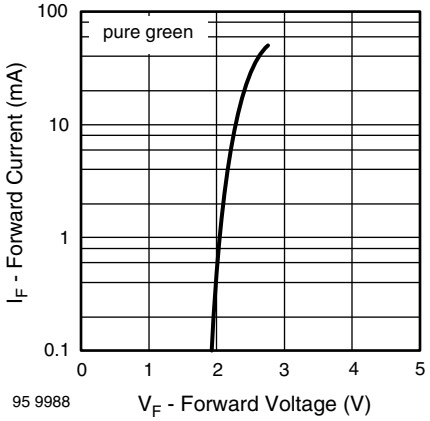

Fig. 24 - Forward Current vs. Forward Voltage

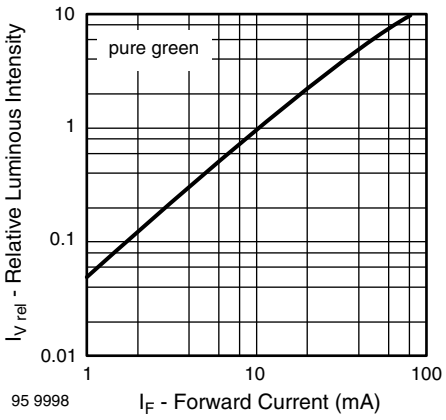

Fig. 27 - Relative Luminous Intensity vs. Forward Current

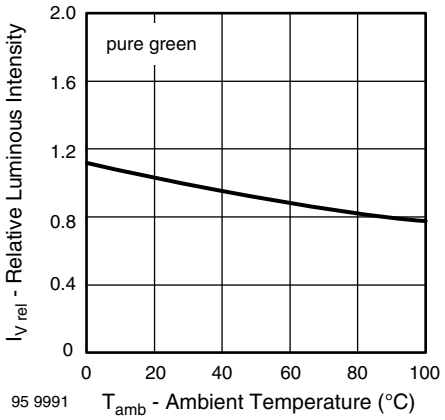

Fig. 25 - Relative Luminous Intensity vs. Ambient Temperature

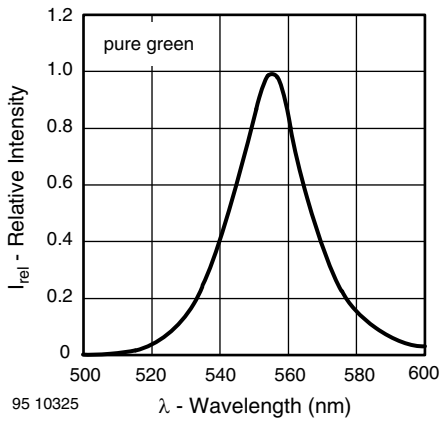

Fig. 28 - Relative Intensity vs. Wavelength

For technical questions, contact: LED@vishay.com
THIS DOCUMENT IS SUBJECT TO CHANGE WITHOUT NOTICE. THE PRODUCTS DESCRIBED HEREIN AND THIS DOCUMENT ARE SUBJECT TO SPECIFIC DISCLAIMERS, SET FORTH AT www.vishay.com/doc?91000

PACKAGE DIMENSIONS in millimeters

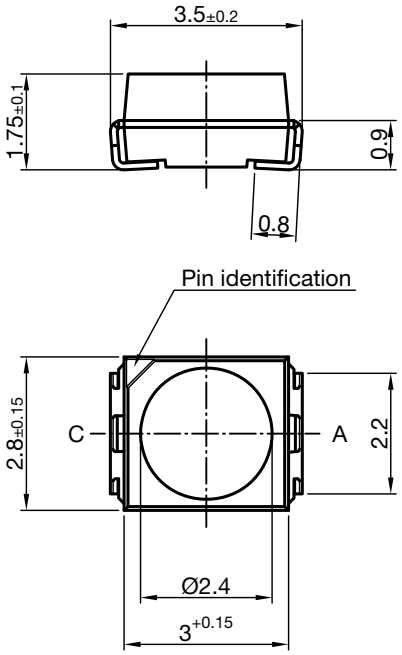

Technical drawings according to DIN specifications

Dimensions in mm

Drawing-No.: 6.541-5067.01-4
Issue: 6; 23.09.13

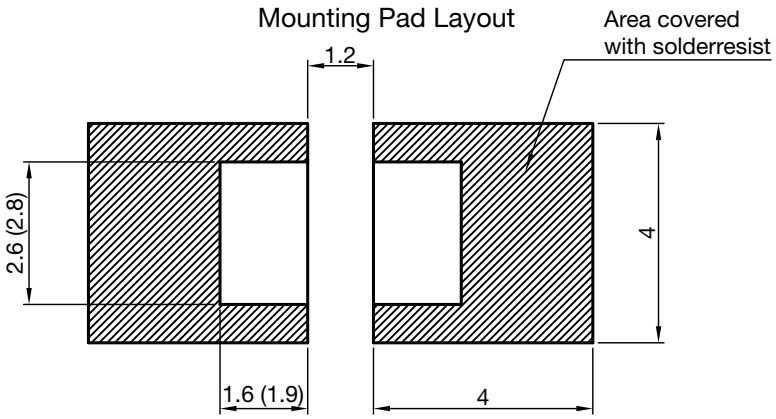

Dimensions: Reflow and vapor phase (wave soldering)

For technical questions, contact: LED@vishay.com
THIS DOCUMENT IS SUBJECT TO CHANGE WITHOUT NOTICE. THE PRODUCTS DESCRIBED HEREIN AND THIS DOCUMENT ARE SUBJECT TO SPECIFIC DISCLAIMERS, SET FORTH AT www.vishay.com/doc?91000

METHOD OF TAPING/POLARITY AND TAPE AND REEL

SMD LED (VLM.3-SERIES)

Vishay's LEDs in SMD packages are available in an antistatic 8 mm blister tape (in accordance with DIN IEC 40 (CO) 564) for automatic component insertion. The blister tape is a plastic strip with impressed component cavities, covered by a top tape.

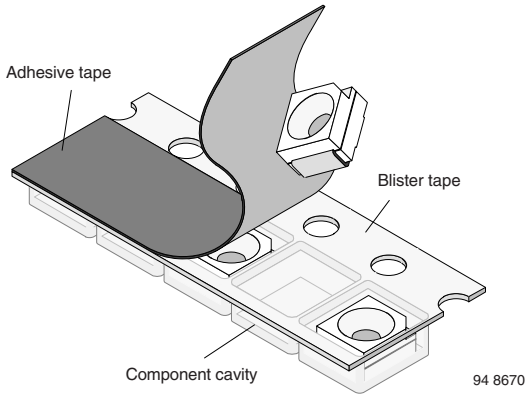

TAPING OF VLM.3...

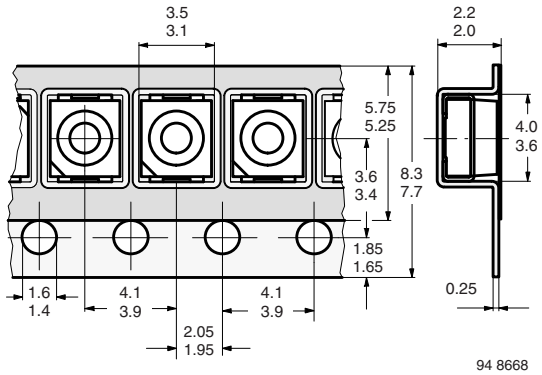

Fig. 29 - Tape Dimensions in mm for PLCC-2

REEL PACKAGE DIMENSION IN MILLIMETERS FOR SMD LEDS, TAPE OPTION GS08 (= 1500 PCS.)

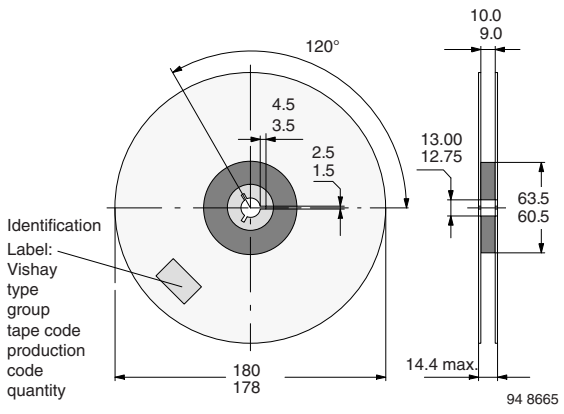

Fig. 30 - Reel Dimensions - GS08

REEL PACKAGE DIMENSION IN MILLIMETERS FOR SMD LEDS, TAPE OPTION GS18 (= 8000 PCS.) PREFERRED

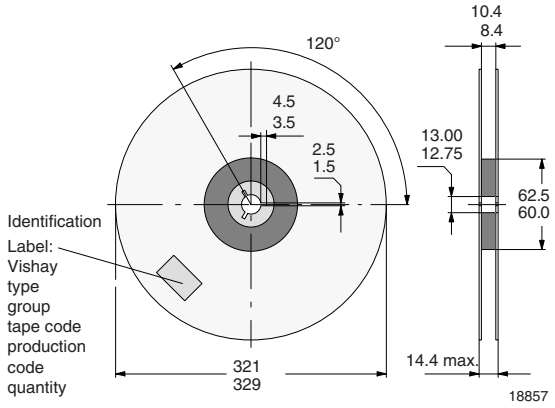

Fig. 31 - Reel Dimensions - GS18

SOLDERING PROFILE

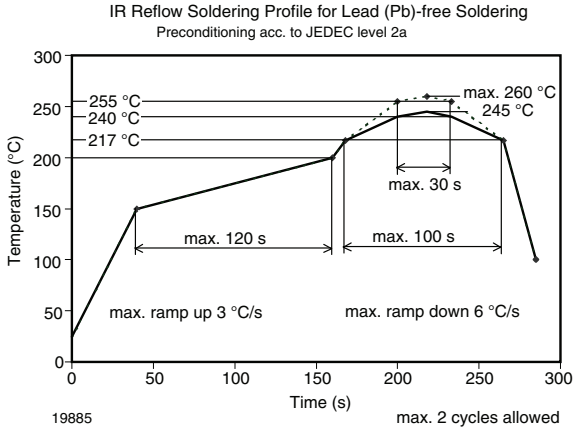

Fig. 32 - Vishay Lead (Pb)-free Reflow Soldering Profile (acc. to J-STD-020)

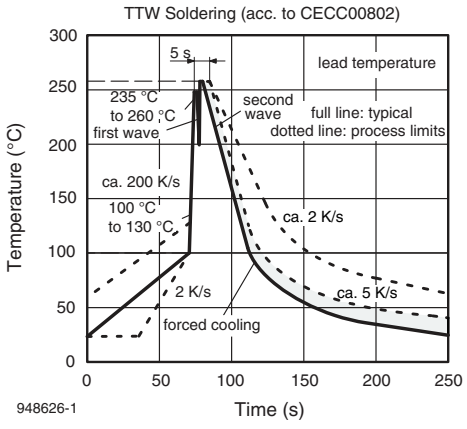

Fig. 33 - Double Wave Soldering of Opto Devices (all Packages)

For technical questions, contact: LED@vishay.com
THIS DOCUMENT IS SUBJECT TO CHANGE WITHOUT NOTICE. THE PRODUCTS DESCRIBED HEREIN AND THIS DOCUMENT ARE SUBJECT TO SPECIFIC DISCLAIMERS, SET FORTH AT www.vishay.com/doc?91000

BAR CODE PRODUCT LABEL (example)

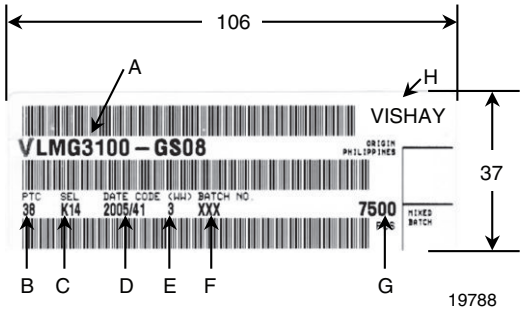

A. Type of component

B. Manufacturing plant

C. SEL - selection code (bin):
e.g.: K1 = code for luminous intensity group
4 = code for color group

D. Date code year/week

E. Day code (e.g. 2: Tuesday)

F. Batch no.

G. Total quantity

H. Company code

DRY PACKING

The reel is packed in an anti-humidity bag to protect the devices from absorbing moisture during transportation and storage.

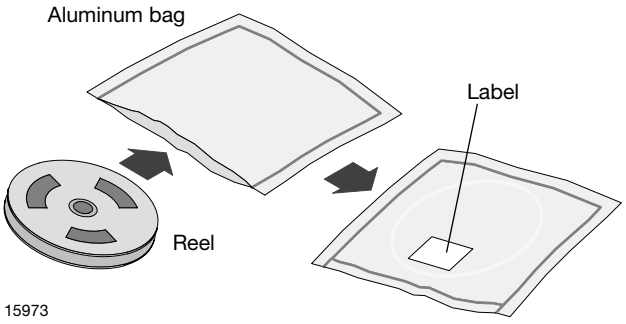

FINAL PACKING

The sealed reel is packed into a cardboard box. A secondary cardboard box is used for shipping purposes.

RECOMMENDED METHOD OF STORAGE

Dry box storage is recommended as soon as the aluminum bag has been opened to prevent moisture absorption. The following conditions should be observed, if dry boxes are not available:

- Storage temperature 10 °C to 30 °C
- Storage humidity ≤ 60 % RH max.

After more than 672 h under these conditions moisture content will be too high for reflow soldering.

In case of moisture absorption, the devices will recover to the former condition by drying under the following condition:

192 h at 40 °C + 5 °C / - 0 °C and < 5 % RH (dry air/nitrogen)
or
96 h at 60 °C + 5 °C and < 5 % RH for all device containers
or
24 h at 100 °C + 5 °C not suitable for reel or tubes.

An EIA JEDEC standard JESD22-A112 level 2a label is included on all dry bags.

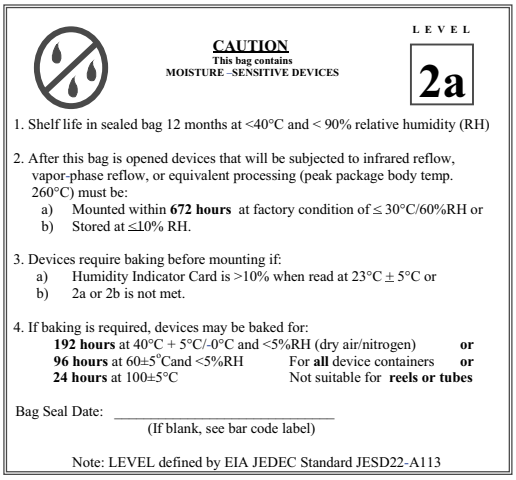

Example of JESD22-A112 level 2a label

ESD PRECAUTION

Proper storage and handling procedures should be followed to prevent ESD damage to the devices especially when they are removed from the antistatic shielding bag. Electro-static sensitive devices warning labels are on the packaging.

VISHAY SEMICONDUCTORS STANDARD BAR CODE LABEL

The Vishay Semiconductors standard bar code labels are printed at final packing areas. The labels are on each packing unit and contain Vishay Semiconductors specific data.

For technical questions, contact: LED@vishay.com
THIS DOCUMENT IS SUBJECT TO CHANGE WITHOUT NOTICE. THE PRODUCTS DESCRIBED HEREIN AND THIS DOCUMENT ARE SUBJECT TO SPECIFIC DISCLAIMERS, SET FORTH AT www.vishay.com/doc?91000

Disclaimer

ALL PRODUCT, PRODUCT SPECIFICATIONS AND DATA ARE SUBJECT TO CHANGE WITHOUT NOTICE TO IMPROVE RELIABILITY, FUNCTION OR DESIGN OR OTHERWISE.

Vishay Intertechnology, Inc., its affiliates, agents, and employees, and all persons acting on its or their behalf (collectively, “Vishay”), disclaim any and all liability for any errors, inaccuracies or incompleteness contained in any datasheet or in any other disclosure relating to any product.

Vishay makes no warranty, representation or guarantee regarding the suitability of the products for any particular purpose or the continuing production of any product. To the maximum extent permitted by applicable law, Vishay disclaims (i) any and all liability arising out of the application or use of any product, (ii) any and all liability, including without limitation special, consequential or incidental damages, and (iii) any and all implied warranties, including warranties of fitness for particular purpose, non-infringement and merchantability.

Statements regarding the suitability of products for certain types of applications are based on Vishay’s knowledge of typical requirements that are often placed on Vishay products in generic applications. Such statements are not binding statements about the suitability of products for a particular application. It is the customer’s responsibility to validate that a particular product with the properties described in the product specification is suitable for use in a particular application. Parameters provided in datasheets and/or specifications may vary in different applications and performance may vary over time. All operating parameters, including typical parameters, must be validated for each customer application by the customer’s technical experts. Product specifications do not expand or otherwise modify Vishay’s terms and conditions of purchase, including but not limited to the warranty expressed therein.

Except as expressly indicated in writing, Vishay products are not designed for use in medical, life-saving, or life-sustaining applications or for any other application in which the failure of the Vishay product could result in personal injury or death. Customers using or selling Vishay products not expressly indicated for use in such applications do so at their own risk. Please contact authorized Vishay personnel to obtain written terms and conditions regarding products designed for such applications.

No license, express or implied, by estoppel or otherwise, to any intellectual property rights is granted by this document or by any conduct of Vishay. Product names and markings noted herein may be trademarks of their respective owners.

Material Category Policy

Vishay Intertechnology, Inc. hereby certifies that all its products that are identified as RoHS-Compliant fulfill the definitions and restrictions defined under Directive 2011/65/EU of The European Parliament and of the Council of June 8, 2011 on the restriction of the use of certain hazardous substances in electrical and electronic equipment (EEE) - recast, unless otherwise specified as non-compliant.

Please note that some Vishay documentation may still make reference to RoHS Directive 2002/95/EC. We confirm that all the products identified as being compliant to Directive 2002/95/EC conform to Directive 2011/65/EU.

Vishay Intertechnology, Inc. hereby certifies that all its products that are identified as Halogen-Free follow Halogen-Free requirements as per JEDEC JS709A standards. Please note that some Vishay documentation may still make reference to the IEC 61249-2-21 definition. We confirm that all the products identified as being compliant to IEC 61249-2-21 conform to JEDEC JS709A standards.