PUSR®
www.pusr.com



USR-SH800

All-in-one Smart HMI

Internet of Things integrated screen

New Features Industrial Control Series

4-core 64-bit high-performance ARM architecture CPU WukongEdge

Linux Ubuntu 20.04 Built-in configuration 10.1 inch touch screen







Product introduction

The USR-SH800 is a high-performance IoT integrated screen with significant advantages. It features an excellent core configuration, equipped with an RK3568 chip, a 4-core 64-bit ARM CPU with a 2.0G main frequency for smooth operation. It integrates WukongEdge functions, enabling easy data acquisition, calculation, and reporting through simple configuration, and supports local display. With an integrated 1.0 TOPS NPU, it supports various AI development tools and interfaces.

Running on Linux Ubuntu 20.04, the USR-SH800 offers a user-friendly desktop for development. Its rich hardware interfaces, including multi-channel serial ports, USB3.0, and HDMI, along with complete drivers, suit diverse scenarios. It supports flexible rail and lug installations for quick deployment. Overall, the USR-SH800 excels in performance, functionality, system, hardware, and installation, making it a top choice for IoT applications.



Intelligent warehouse logistics



Intelligent Agricultural Environmental



Intelligent Transportation

Product Feature

- RK3568,4 -core64-bit CPU, 2GHz frequency, ultra-high performance, fast operation;
- Multi-serial port, 2 RS485, 2 RS23 interface;
- Rich interface, HDMI output, two USB 3.0 interface;
- 10.1 inch touch screen, the picture display is clearer;
- Standard Linux Ubuntu system, desktop operation is more convenient.
- Embedded Node-red graphical design simplifies and speeds up development. It can load more protocol libraries for rapid programming.
- Built-in WukongEdge edge application service makes it easier and faster to use.
- With powerful edge gateway functions, it supports edge acquisition, calculation, group reporting, 2000 real - point collection, and point expansion.
- Supports multi - point linkage control, enabling SMS alarms, platform alarms, point - based control, and DO control.
- It supports a wide range of acquisition protocols, including the standard Modbus, various mainstream PLC protocols, and multiple industry - specific protocols.
- Protocol conversion support: Modbus, OPC UA, power protocols, building protocols, and more.

Product Parameters

Processor CPU	Rockchip RK3568 ARMquad-core 64-bit processor,clocked up to 2.0GHz
Graphics processor GPU	ARM G52 2EE GPU OpenGL ES 1.1/2.0/3.2, OpenCL 2.0, Vulkan 1.1, embedded high-performance2D acceleration hardware
Neural Network Processing NPU	Built-in neural network processorNPU, 1.0TOPS@INT8 Performance Support Caffe/Mxnet/TensorFlow/TFLite/ONNX/Darknet models.
Operating system	Linux Ubuntu 20.04
MemoryDDR	DDR4 4GB
Storage	eMMC 32GB
Touch screen	10.1 inch/800*1280 resolution/capacitive
Network	Support2- way Ethernet10/100 Mbps,Ethernet support
	Support2.4GHzWi-Fi802.11b/g/n
Display interface	1* HDMI OUT2.0 ; Support 4K60fps output
audio	1*Headset output
RTC	Built-in real-time clock power supply battery, support timing switch machine
USB	1*USB3.0 HOST 1*USB3.0 OTG (compatible upgrade, default HOST function)
Key	1*Upgrade key
Serial port	2*RS232 ,2*RS485
Mains input	DC12V/5.5mm Core 2.1 mm DCHead 2A- 5A (Surge voltage less than18V required,striated) Wave voltage less than100mV), support power-on self-start or power-on press the power button to start
Storage temperature	-20 - 80 °C
Operating humidity	10%-80%
Size	160mm*85mm*28mm
Multimedia	4K 60fpsH.265/H.264 video decoding 1080P 100fps H.265/H.264 video encoding 8M ISP, support HDR
Language support	English by default, downloadable in other languages
Multi-touch	Supports up to 10 simultaneous touch points
Display Brightness Viewing angles	Display brightness: 280 cd/m² Viewing angle: 178° (IPS full-view angle)
Backlight lifetime	Service life exceeds 50,000 hours, meeting the requirement of 24/7 uninterrupted operation in industrial scenarios.
Protection rating	IP65

Product Details



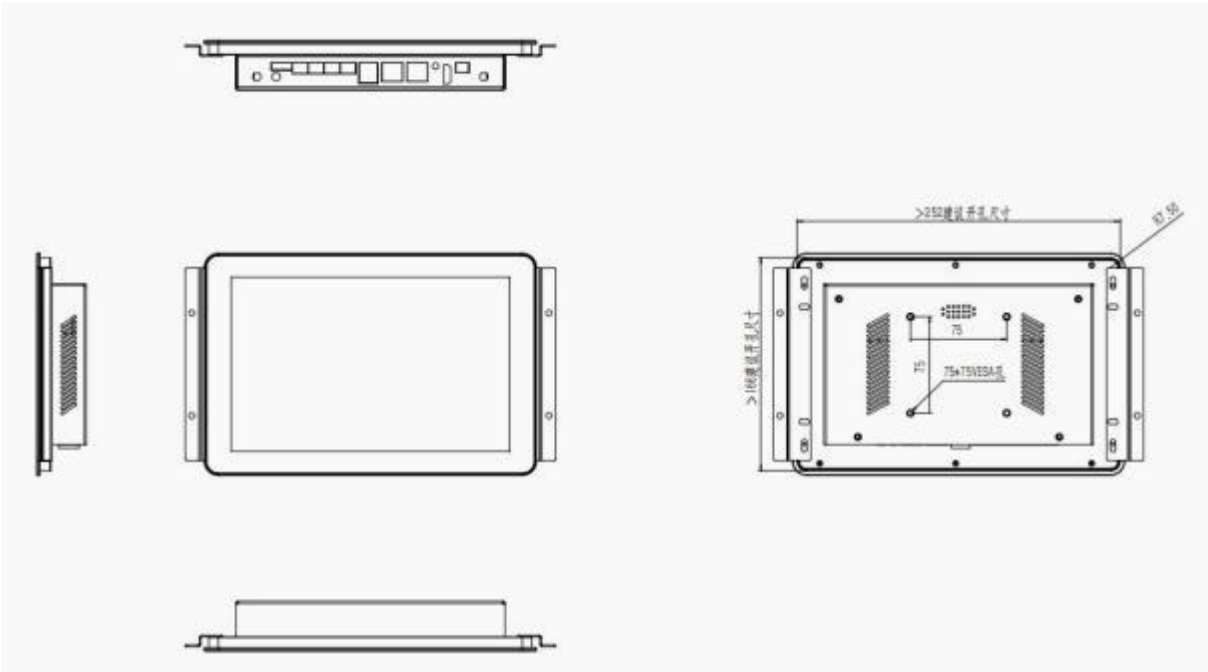

Product Selection

Product model	Ethernet	IO	Wireless network	Support Regional	Support band
USR-SH800-EW	√	×	WiFi 2.4GHz	Global	IEEE802.11b/g/n/ax 2.4-2.4835GHz