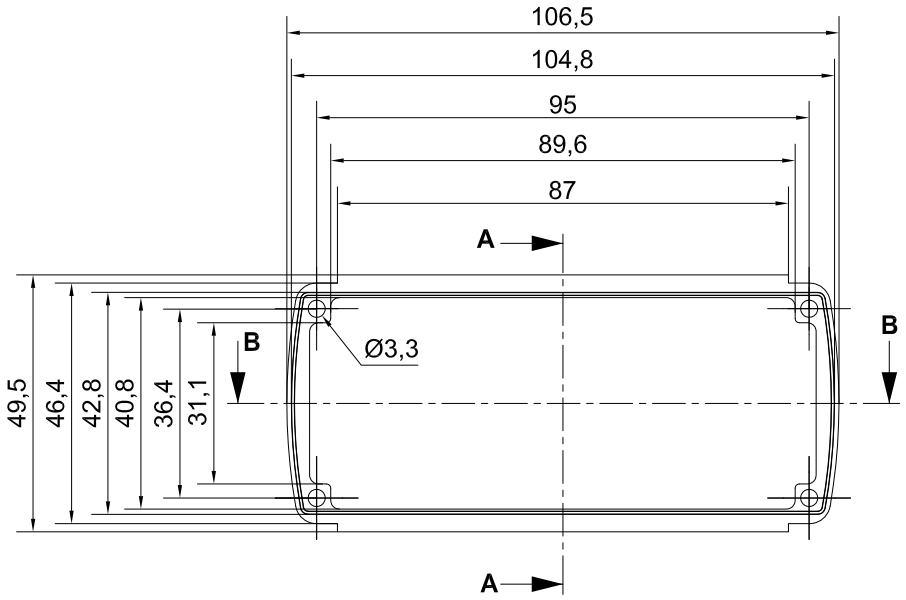


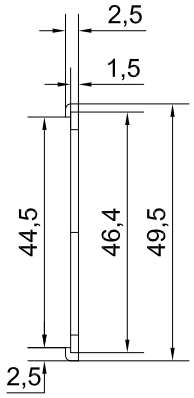


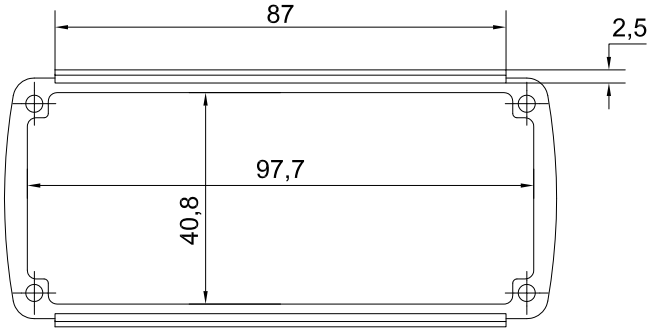







***B-B***
***SCALA 1:1***



***A-A***
***SCALA 1:1***

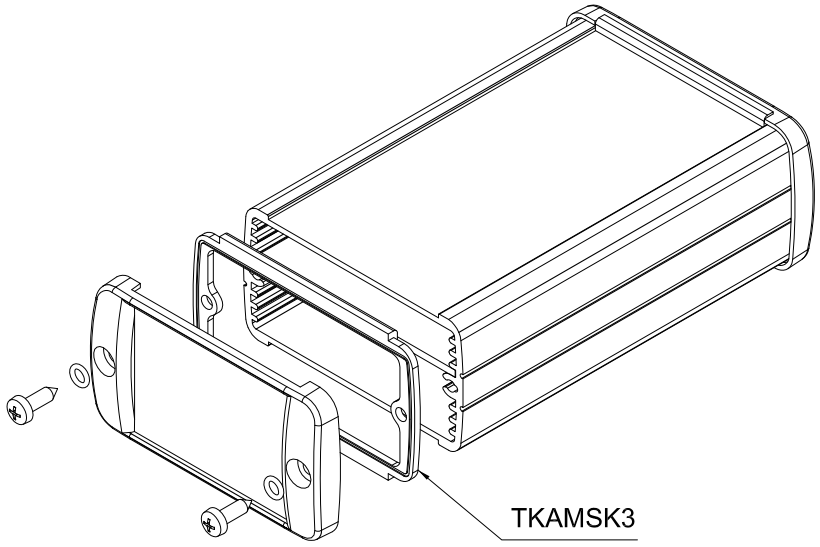


| | | |
|---|---|---|
| TEKO ENCLOSURES | Denomination: TKAMSK3 | Part. Number: TKAMSK3 |
| | Subject to technical modification without prior notice. Tipographical and other errors do not justify any claim for damages. All dimensions should be verified using an actual moulded part. | Rev. Index: 0 / Scale: 1:1 |
| | This document contains proprietary information of **TEKO S.p.a.** and is tendered subject to the conditions that the Information be retained in confidence not be reproducer or copied and not be used or incorporated in any product. | Date: 22/11/2010 / Format design: A3 |