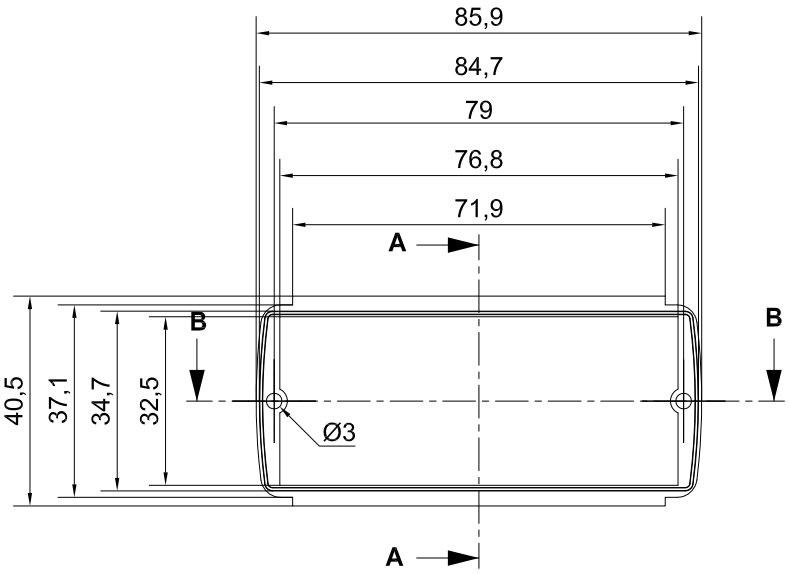

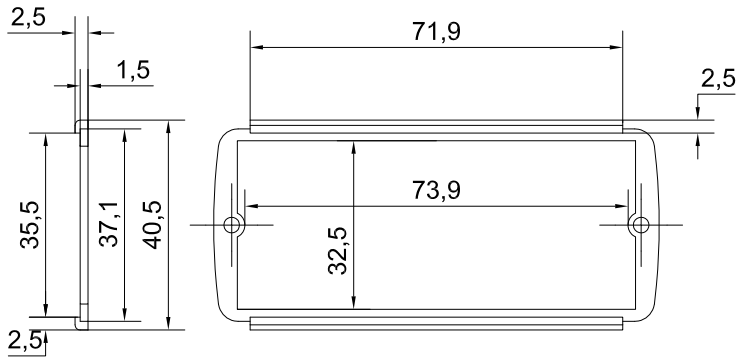

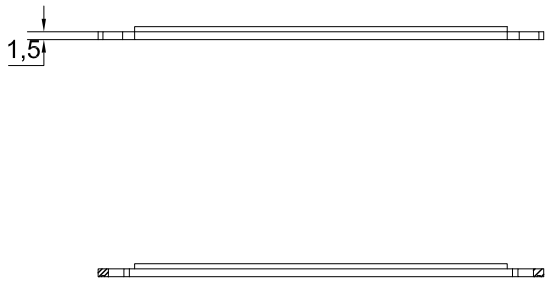

B-B
SCALA 1:1

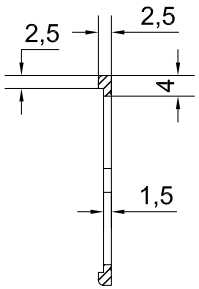

A-A
SCALA 1:1

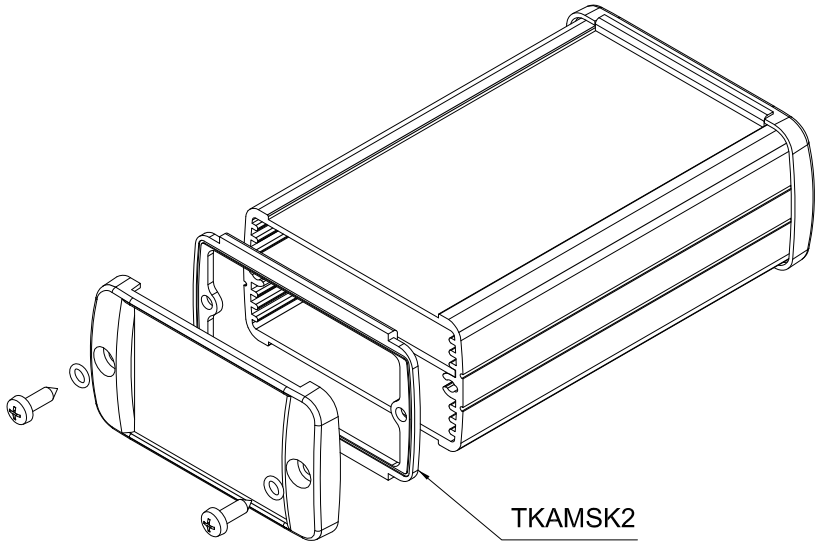

TEKO ENCLOSURES	Denomination: TKAMSK2	Part. Number: TKAMSK2
	Subject to technical modification without prior notice. Tipographical and other errors do not justify any claim for damages. All dimensions should be verified using an actual moulded part.	Rev. Index: 0 / Scale: 1:1
	This document contains proprietary information of **TEKO S.p.a.** and is tendered subject to the conditions that the Information be retained in confidence not be reproducer or copied and not be used or incorporated in any product.	Date: 22/11/2010 / Format design: A3