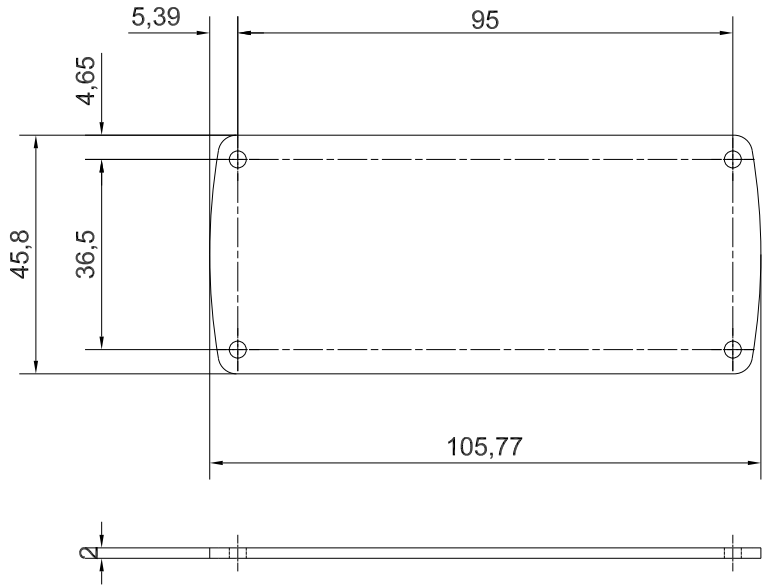

ALP-3

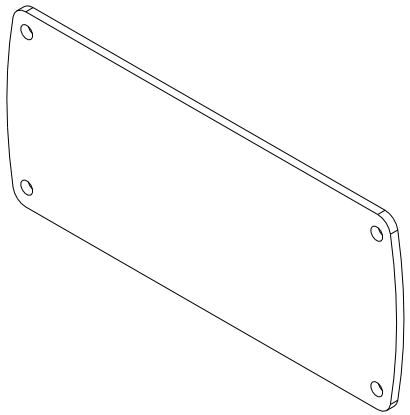

TEKO ENCLOSURES	Denomination: Accessory ALP-3	Part. Number: ALP-3
	Subject to technical modification without prior notice. Tipographical and other errors do not justify any claim for damages. All dimensions should be verified using an actual moulded part.	Rev. Index / Scale
	This document contains proprietary information of **TEKO S.p.a.** and is tendered subject to the conditions that the information be retained in confidence not be reproducer or copied and not be used or incorporated in any product.	Date: 05/05/2005 / Format design: A4