LTC Batteries

SL-2870 Size: C

› XOL – extended operating life

Performance Data

(Typical values for batteries stored at +25 °C for one year)

System	Lithium Thionyl Chloride
Nominal voltage	3.6 V
Nominal capacity	8.5 Ah
Nominal current	3 mA
Max. continuous discharge current	75 mA
Pulse current capability	200 mA
Anode surface area	30 cm^2
Lithium content	2.5 g
Weight	49.5 g
Volume	26 cm^3
Temperature range	–55 °C ... +85 °C



Typical Discharge Curves at +25 °C

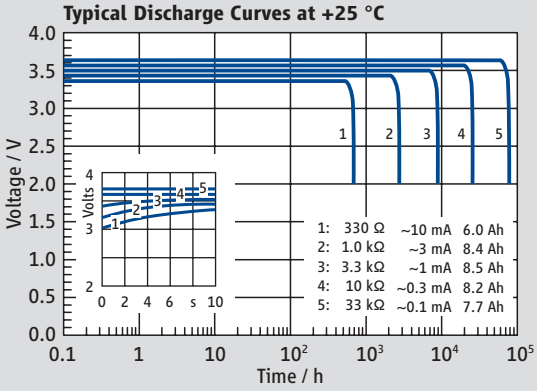

Available Capacity

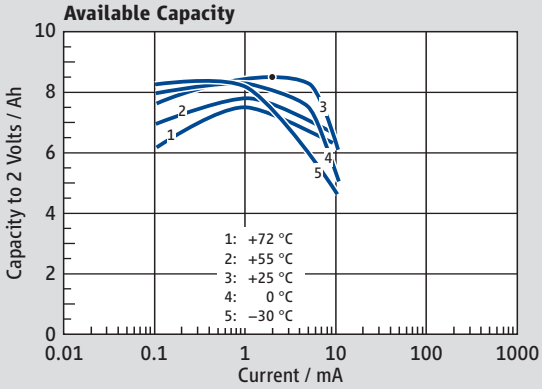

Operating Voltage

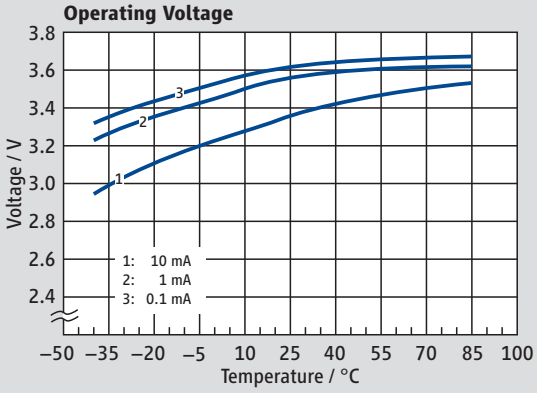

SL-2870/S

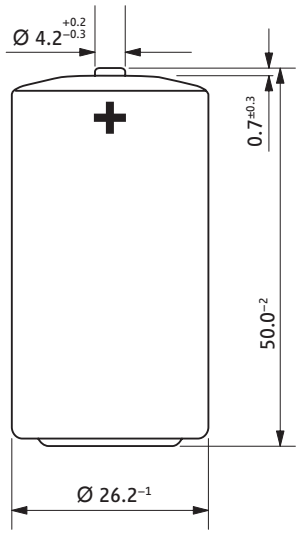

SL-2870/T

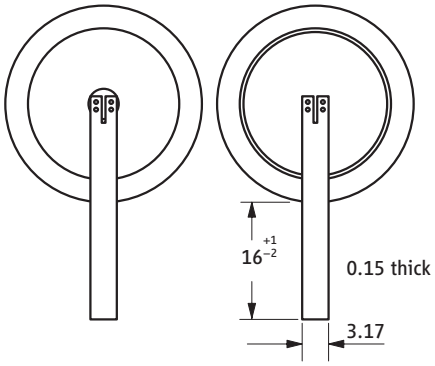

SL-2870/P

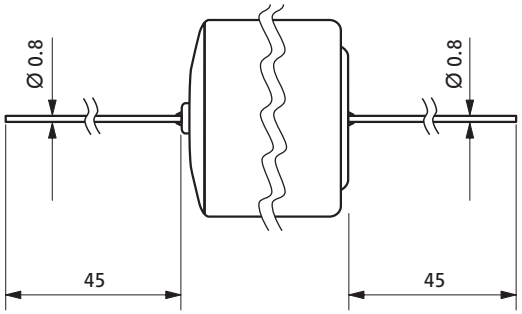

Available Terminations		Catalogue No.
SL-2870/S	Standard	11 2 18701 00
SL-2870/T	Tags	11 2 18702 00
SL-2870/P	Pins	11 2 18703 00

WARNING: Fire, explosion, and severe burn hazard. Do not recharge, disassemble, heat above 100 °C, incinerate, or expose contents to water.

Any values given here are for informational purposes only. They also depend on actual conditions of use and are not warranties of future performance. Subject to change.

Tadiran Batteries GmbH • Industriestr. 22 • 63654 BÜDINGEN
GERMANY • Tel.: +49 (0)6042 954-0 • www.tadiranbatteries.de

PDC13Eng