TE CONNECTIVITY (TE) RESERVES THE RIGHT TO CHANGE THIS DRAWING AT ANYTIME. USERS SHOULD EVALUATE THE SUITABILITY OF THE PRODUCT FOR THEIR APPLICATION.

REVISION

LTR	DESCRIPTION	DATE	APPROVED
B	REVISED PER ECO-15-005245	04/06/2015	I. MYONG

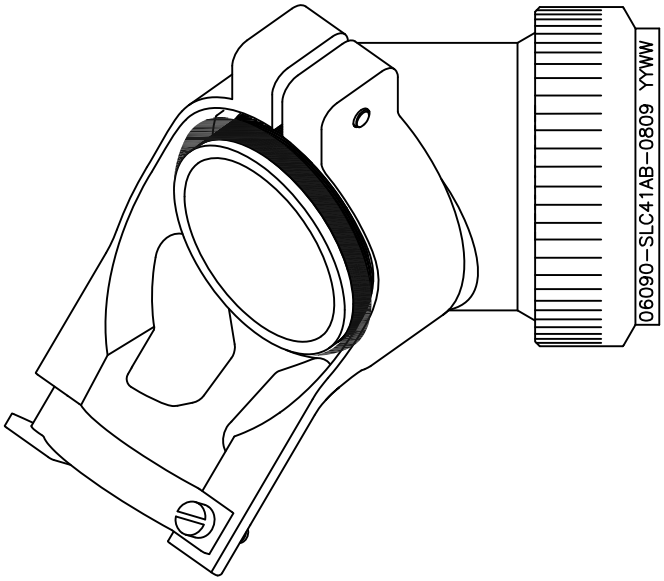

CODE 41 – SPIN-LOCK ADAPTER WITH STRAIN RELIEF FITTING

NOTES:

1. THIS PRODUCT IS DESIGNED TO TERMINATE A BRAIDED CABLE SHIELD TO A CONNECTOR AND PROVIDE STRAIN RELIEF.
2. SEE DRAWING "TR" FOR DETAIL ON TINEL-LOCK RING. RINGS ARE DESIGNED TO BE HEATED ELECTRICALLY. ALL RINGS ARE MARKED WITH THERMOCHROMIC PAINT WHICH CHANGES COLOR WHEN INSTALLATION TEMPERATURE IS REACHED.
3. ADAPTER TO BE PERMANENTLY MARKED WITH CODE IDENT. NO. AND PART NO. LESS RING DESIGNATOR (e.g. 06090-SLC40AB-0809 YYWW).
4. ADAPTER MATES TO MIL-DTL-38999, SERIES I & II, CLASS E, AND : MS27466, MS27467, MS27468, MS27472, MS27473, MS27474, MS27479, MS27480, MS27484, MS27497, MS27652, MS27653, MS27656 CONNECTORS.
5. INSTALLATION PROCEDURE MIP-103-3.
6. PERFORMANCE SPECIFICATION MPS-103.
7. FOR ADDITIONAL ORDERING INFORMATION, REFER TO CH00-0250-019.

If this document is printed it becomes uncontrolled. Check for the latest revision

©2015 TE CONNECTIVITY LTD. FAMILY OF COMPANIES. ALL RIGHTS RESERVED
TE CONNECTIVITY AND TE CONNECTIVITY (LOGO) ARE TRADEMARKS.
OTHER LOGOS PRODUCT AND/OR COMPANY NAMES MAY BE TRADEMARKS OF THEIR RESPECTIVE OWNERS.

Raychem Adapters
CUSTOMER DRAWING

UNLESS OTHERWISE SPECIFIED DIMENSIONS ARE IN INCHES. REFERENCE METRIC DIMENSIONS ARE IN BRACKETS [metric].	DRAWN: D. JAIN	DATE: 08/08/2011	TE Connectivity					
DECIMALS TOLERANCES: XXX ± .005 [0.13mm] XX ± .01 [0.25mm] X ± .1 [0.50mm] ANGLES TOLERANCE: ± 1°	CHECKED: B. WONG	DATE: 08/08/2011						
	APPROVED: I. MYONG	DATE: 02/20/2015	TITLE: CODE 41 – SPIN-LOCK ADAPTER					
	MATERIAL: SEE NOTES	FINISH: SEE NOTES						
SCALE: DO NOT SCALE THIS DRAWING	CAD FILE: SLC41.dwg	THIRD ANGLE PROJECTION:	SIZE: A	SHEET: 1 OF 3	CAGE CODE: 06090	DRAWING NO: SLC41	REV. B	

STRAIGHT

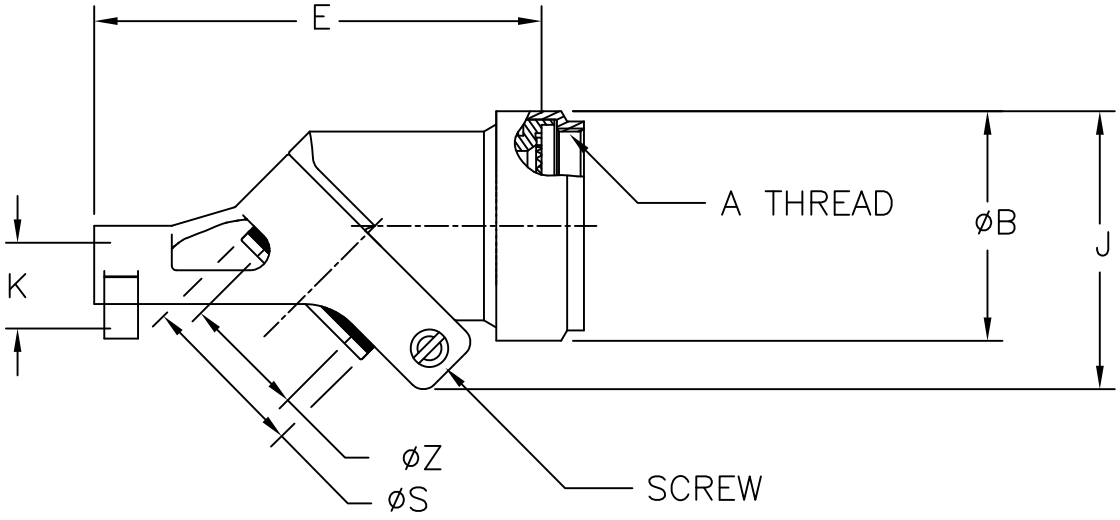

45° POSITION

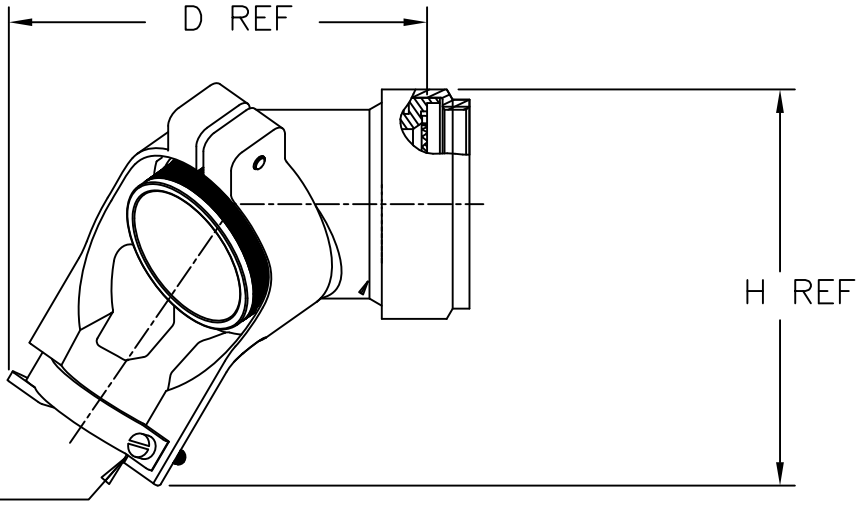

90° POSITION

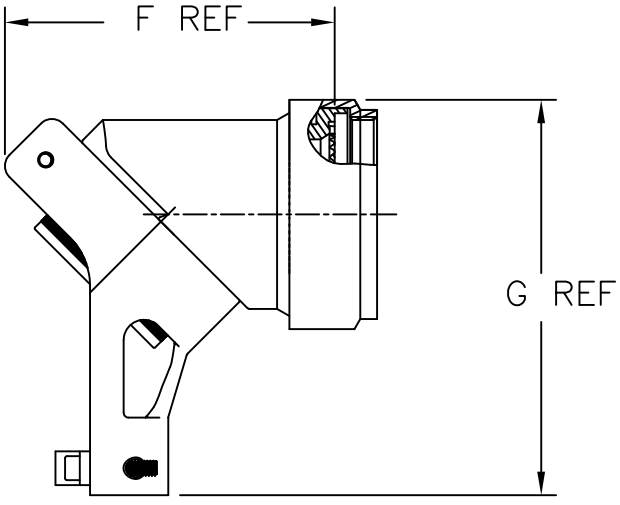

If this document is printed it becomes uncontrolled. Check for the latest revision

Raychem Adapters
CUSTOMER DRAWING

		SIZE	CAGE	SHEET	DWG. NO.	REV
TE	DO NOT SCALE THIS DRAWING	A	06090	2 OF 3	SLC41	B

TABLE I

ORDER NO.	SHELL SIZE		AVAILABLE ENTRY SIZES (SEE TABLE III)			A UNEF THD CLASS 2B	ØB MAX
	SER I	SER II	S	L	XL		
08	09	08	–	–	04	.4375–28	.70 (17.8)
10	11	10	–	04	06	.5625–24	.82 (20.8)
12	13	12	04	06	08	.6875–24	.95 (27.2)
14	15	14	06	08	10	.8125–20	1.07 (29.2)
16	17	16	08	10	12	.9375–20	1.20 (30.5)
18	19	18	10	12	14	1.0625–18	1.32 (33.5)
20	21	20	10	12	16	1.1875–18	1.45 (36.8)
22	23	22	12	14	18	1.3125–18	1.57 (39.1)
24	25	24	12	16	20	1.4375–18	1.70 (43.2)

TABLE II

ORDER NO.	D REF	E MAX	F REF	G REF	H REF	K MAX	J MAX
08	1.88 (47.8)	1.90 (48.3)	1.37 (34.8)	1.66 (42.2)	1.80 (45.7)	.234 (5.94)	1.09 (27.7)
10	2.00 (50.8)	2.05 (52.1)	1.47 (37.3)	1.83 (46.5)	1.86 (47.2)	.234 (5.94)	1.20 (30.5)
12	2.04 (51.8)	2.18 (55.4)	1.54 (39.1)	1.95 (49.5)	1.94 (49.3)	.328 (8.45)	1.26 (32.0)
14	2.30 (58.4)	2.38 (60.5)	1.79 (45.5)	2.07 (52.6)	2.11 (53.6)	.457 (11.61)	1.43 (36.3)
16	2.44 (62.0)	2.53 (64.3)	1.93 (49.0)	2.24 (56.9)	2.28 (57.9)	.614 (15.60)	1.58 (40.1)
18	2.59 65.8)	2.76 (70.1)	2.21 (56.1)	2.47 (62.7)	2.55 (64.8)	.634 (16.10)	1.75 (44.5)
20	2.70 (68.6)	2.81 (71.4)	2.18 (55.4)	2.56 (65.0)	2.67 (67.8)	.698 (17.73)	1.89 (48.0)
22	2.89 (73.4)	3.15 (80.0)	2.29 (58.2)	2.90 (73.7)	2.96 (75.2)	.823 (20.90)	1.99 (50.5)
24	2.96 (75.2)	3.25 (82.6)	2.39 (60.7)	2.96 (75.2)	3.04 (77.2)	.853 (21.67)	2.10 (53.3)

TABLE III

ENTRY SIZE	ØS	ØZ +.010 (0.25) –.020 (0.50)
04	.376 (9.55) .370 (9.40)	.250 (6.35)
06	.501 (12.73) .495 (12.57)	.375 (9.53)
08	.626 (15.90) .619 (15.72)	.500 (12.70)
10	.752 (19.10) .742 (18.85)	.625 (15.88)
12	.877 (22.28) .867 (22.02)	.750 (18.84)
14	1.002 (25.45) .991 (25.17)	.875 (22.23)
16	1.127 (28.63) 1.116 (28.35)	1.000 (25.40)
18	1.252 (31.80) 1.241 (31.52)	1.125 (28.58)
20	1.377 (34.98) 1.366 (34.70)	1.250 (31.75)

If this document is printed it becomes uncontrolled. Check for the latest revision

Raychem Adapters
CUSTOMER DRAWING

	DO NOT SCALE THIS DRAWING	SIZE	CAGE	SHEET	DWG. NO.	REV
TE		A	06090	3 OF 3	SLC41	B