© 2025 TE Connectivity. All Rights Reserved.

REVISIONS					
P	LTR	DESCRIPTION	DATE	DWN	APVD
	A	INITIAL RELEASE	01AUG2025	AD	GY

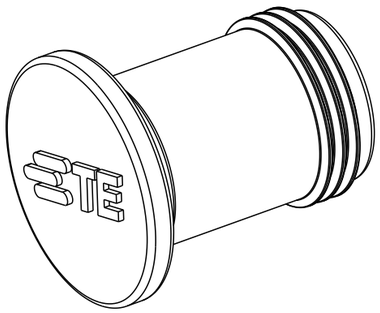

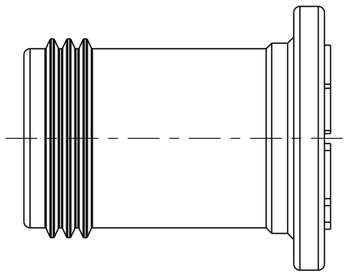

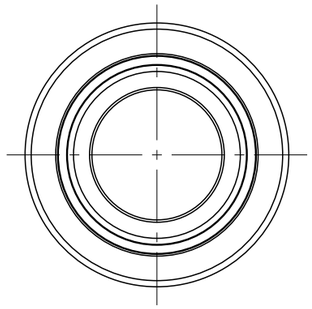

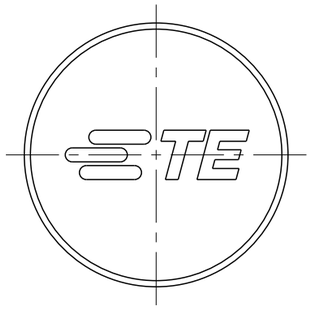

NOTES:

1. MATERIAL: RUBBER.
   PROTECTION DEGREE: IP67 (MATED).

2. APPLY TO BELOW PART NUMBER:
   H101100030A-000
   H101100130A-000

注释:

1. 材料:橡胶.
   防护等级: IP67(配合).

2. 适用于以下料号:
   H101100030A-000
   H101100130A-000

H1904002003-000	HPC-125/200/250-CAP	CAP FOR HPC-125/200/250 RECEPTACLE HPC-125/200/250 插座防尘盖
PART NUMBER 零件料号	PART DESCRIPTION 零件描述	

THIS DRAWING IS A CONTROLLED DOCUMENT.

DIMENSIONS: mm

TOLERANCES UNLESS OTHERWISE SPECIFIED:
0 PLC ±-
1 PLC ±-
2 PLC ±-
3 PLC ±-
4 PLC ±-
ANGLES ±-

MATERIAL: - / -

FINISH: - / -

DWN Alan Dong 17APR2025
CHK David Li 17APR2025
APVD Gino Yao 17APR2025

PRODUCT SPEC: 108-137770
APPLICATION SPEC: 114-137770
WEIGHT: -

TE Connectivity

NAME: CAP FOR HPC-125/200/250 RECEPTAC

SIZE	CAGE CODE	DRAWING NO	RESTRICTED TO
A3	00779	C-H1904002003000	-

CUSTOMER DRAWING

SCALE 2:1 | SHEET 1 OF 1 | REV A