THIS DRAWING IS UNPUBLISHED. RELEASED FOR PUBLICATION -,- .
© COPYRIGHT - By, - ALL RIGHTS RESERVED.

LOC	DIST
AJ	16

REVISIONS

P	LTR	DESCRIPTION	DATE	DWN	APVD
	A1	REVISED PER ECO-11-005030	11MAR11	RK	HMR

1. USE INSTRUCTION SHEET 408-9088.
2. USE WITH PRO CRIMPER 354940-1.

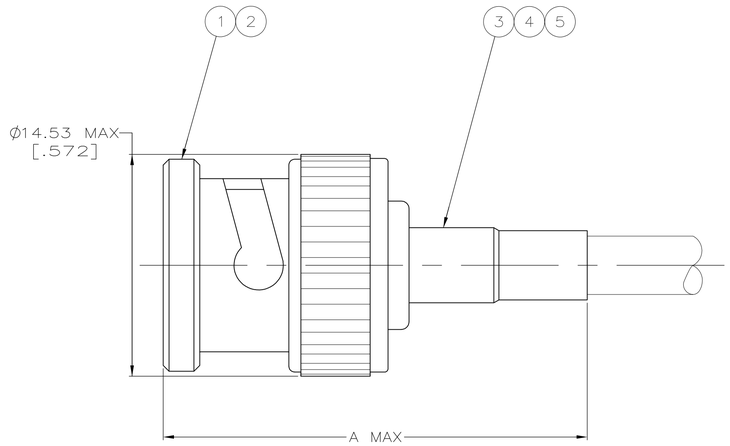

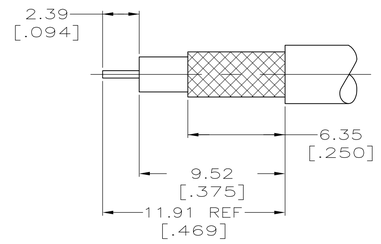

RECOMMENDED STRIP LENGTH

FOR USE WITH CABLE	A	CRIMP CONTACT (SQUARED)	CRIMP FERRULE (DIA)	DIE SET 2	5 PLASTIC TUBING QTY=1	4 TUBING QTY=1	3 FERRULE QTY=1	2 CONTACT QTY=1	1 PLUG ASSY QTY=1	PART NUMBER
C&M 17189	28.96 [1.140]	.044	.104/.170	318451-2	414932-2	–	9-328666-0	1-221182-6	9-221184-2	3-5221185-4
COMSCOPE F59 HEC-2	28.96 [1.140]	.044	.265	58536-1	–	–	9-50427-0	1-221182-0	9-221184-1	3-5221185-1
COMM/SCOPE S59HEC	28.96 [1.140]	.044	.265	58536-1	–	–	9-50427-0	221182-2	9-221184-5	2-5221185-9
BELDEN 8281, 9231	31.75 [1.250]	.044	.330	58538-1	–	–	9-50427-2	1-221182-0	9-221184-3	2-5221185-6
MONTROSE CBL8196	28.96 [1.140]	.044	.170	58174-1	–	–	9-329461-2	221182-2	9-221184-2	2-5221185-3
AT&T 735A	28.96 [1.140]	.044	.170	58174-1	–	–	9-328666-2	221182-6	9-221184-2	1-5221185-8
BELDEN 1164A, 1167A	28.45 [1.120]	.044	.170	58174-1	–	–	9-329461-0	1-221182-6	9-221184-2	1-5221185-5
BELDEN 9145	27.69 [1.090]	.044	.240	58536-1	–	–	9-50428-1	1-221182-0	9-221184-1	1-5221185-0
RG-59 TYPE,C.C=.031 DIA,CAROL COLUMBIA,C1103	27.69 [1.090]	.044	.240	58536-1	–	–	9-50428-0	1-221182-0	9-221184-1	5221185-9
RG-179/U,179A/U,179B/U,187/U,187A/U	28.96 [1.140]	.044	.104/.170	318451-2	227194-2	222001-4	9-328666-0	1-221182-2	9-221184-2	5221185-8
RG-6/U,6A/U	37.85 [1.490]	.044	.330	58538-1	–	–	9-51713-1	1-221182-0	9-221184-4	5221185-7
BELDEN 8281, 8281F, 9231 AND GEPCO VP6000	31.75 [1.250]	.044	.330	58538-1	–	–	9-221132-2	1-221182-0	9-221184-3	5221185-5
BELDEN 8218	28.45 [1.120]	.044	.170	58174-1	–	–	9-329461-0	221182-6	9-221184-2	5221185-3
RG-59/U,59A/U,59B/U	27.69 [1.090]	.044	.240	58536-1	–	–	9-50428-0	221182-2	9-221184-1	5221185-2
BELDEN 9248	27.69 [1.090]	.044	.265	58536-1	–	–	9-50427-0	221182-8	9-221184-0	5221185-1

THIS DRAWING IS A CONTROLLED DOCUMENT.

DIMENSIONS: mm [INCHES]

TOLERANCES UNLESS OTHERWISE SPECIFIED:
0 PLC ± –
1 PLC ± –
2 PLC ± 0.41 [.016]
3 PLC ± –
4 PLC ± –
ANGLES ± –

MATERIAL –
FINISH –

DWN 21APR2005 J. ALCORTA – DOCK5
CHK 21APR2005 J. HAVENER
APVD 21APR2005 J. LIPPERT
PRODUCT SPEC 108-12095
APPLICATION SPEC –
WEIGHT –
CUSTOMER DRAWING

TE Connectivity

NAME PLUG, 75 OHM, COMMERICAL BNC

SIZE	CAGE CODE	DRAWING NO	RESTRICTED TO
A1	00779	C-5221185	–

SCALE 5:1 SHEET 1 OF 1 REV A1