THIS DRAWING IS UNPUBLISHED. RELEASED FOR PUBLICATION – –, .
© COPYRIGHT – By – ALL RIGHTS RESERVED.

LOC	DIST
—	—

REVISIONS

P	LTR	DESCRIPTION	DATE	DWN	APVD
	CU7	REVISED PER ECO-11-005140	30MAR11	RK	HMR

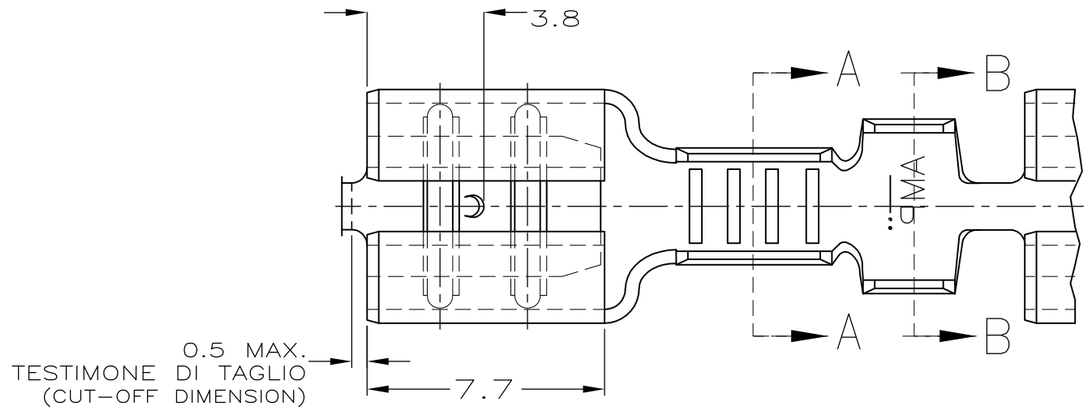

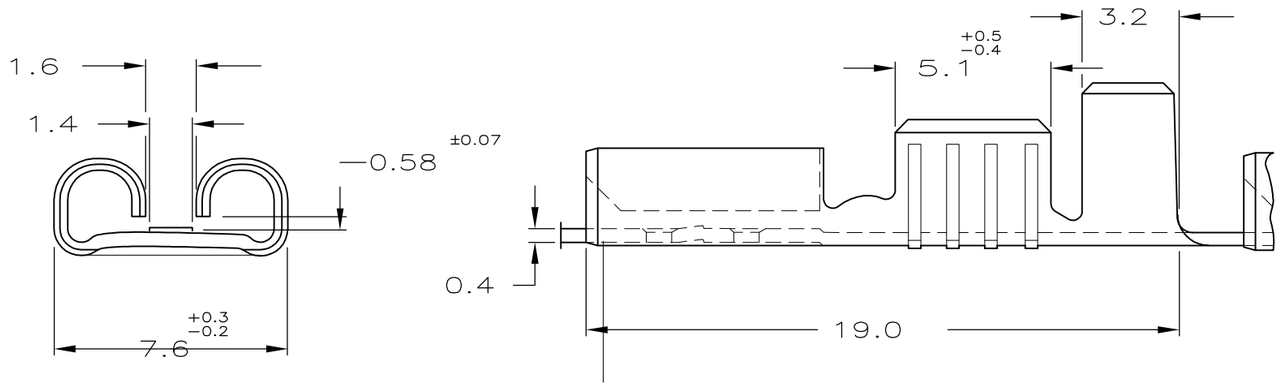

for 0.8 mm tab thickness.

1) STATO DI FORNITURA – SCALA 1:1
(SUPPLY CONDITION – SCALE 1:1)

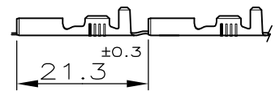

SENSO DI USCITA DEL TERMINALE DALLA BOBINA
(DIRECTION OFF TOP OF REEL)

2) SPECIFICA DI PRODOTTO 108-20019
(PRODUCT SPEC. 108-20019)
SPECIFICA DI APPLICAZIONE 114-20023
(APPLICATION SPEC. 114-20023).

3) PER LE VERSIONI IN PEZZI SCIOLTI VEDERE DISEGNO 160304
(FOR LOOSE PIECE VERSION SEE DRAWING 160304).

4) 115-16-1, GIUNZIONE MEDIANTE SALDATURA
(115-16-1, SPLICE FREE).

△5 BOBINATO CON CARTA INTERPOSTA
(REELED WITH INTERLEAVE PAPER STRIP).

△6 OBSOLETE PARTS: OBSOLETE CIS STREAMLINING PER D.RENAUD/D.SINISI

SEZIONE A–A
(SECTION A–A)

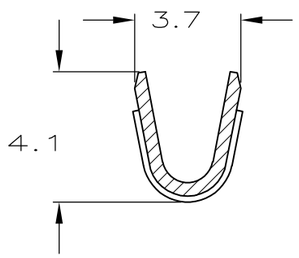

SEZIONE B–B
(SECTION B–B)

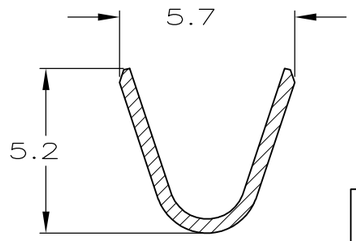

△6 OBSOLETE	△5	NUDO (UNPLATED)	BRONZO FOS. (PH. BRONZE)	4-160256-9 CU
		ARGENTATO (SILVER PLATED)	OTTONE (BRASS)	4-160256-7 CU
		NUDO (UNPLATED)	BRONZO FOS. (PH. BRONZE)	4-160256-5 CT
	△5	PRE NICHELATO (PRE NICKEL PLATED)	ACCIAIO (STEEL)	4-160256-2 CT
		STAGNATO (TIN PLATED)	BRONZO FOS. (PH. BRONZE)	3-160256-1 CT
		NUDO (UNPLATED)	BRONZO FOS. (PH. BRONZE)	2-160256-8 CT
	△5	STAGNATO (TIN PLATED)	OTTONE (BRASS)	2-160256-2 CU
		NUDO (UNPLATED)	OTTONE (BRASS)	2-160256-1 CT
		PRE NICHELATO (PRE NICKEL PLATED)	ACCIAIO (STEEL)	0-160256-5 CT
NOTE		FINITURA / COLORE (FINISH / COLOUR)	MATERIALE (MATERIAL)	NUMERO (PART NO) REV

THIS DRAWING IS A CONTROLLED DOCUMENT.

DIMENSIONS: mm

TOLERANCES UNLESS OTHERWISE SPECIFIED:
0 PLC ± 0.3
1 PLC ± –
2 PLC ± –
3 PLC ± –
4 PLC ± –
ANGLES ± 2°

DIAM. ISOLANTE (INS. DIA. RANGE)	RANGO FILO (WIRE RANGE)
3.0–4.3mm DIA.	1.0–2.5 mm2

MATERIAL –
FINISH –

DWN H. YAALI 27 JAN 2000
CHK C. TARTARI 27 JAN 2000
APVD —
PRODUCT SPEC —
APPLICATION SPEC —
WEIGHT —

TE Connectivity

NAME
FASTON® Connector,
.250 sr. REC. CONTACT.

SIZE	CAGE CODE	DRAWING NO	RESTRICTED TO
A3	00779	C-160256	—

CUSTOMER DRAWING | SCALE 5:1 | SHEET 1 OF 1 | REV CU7