THIS DRAWING IS UNPUBLISHED. RELEASED FOR PUBLICATION -,- .
© COPYRIGHT - By - ALL RIGHTS RESERVED.

LOC	DIST
—	—

REVISIONS

P	LTR	DESCRIPTION	DATE	DWN	APVD
	B2	REVISED PER ECO-14-000329	10JAN2014	NK	RH

		DIMENSION A	DIMENSION B	DIMENSION C	DIMENSION D	OPERATING FORCE	PART NUMBER	TYPE	MARK:A	MARK:B		 ACTUATED
	ON-ON	.098 [2.5]	.331 [8.4]	.744 [18.9]	.098 [2.5]	7	1977740-1 MPS103DPC	SPDT	MPS103D ALCO	AC 3A 125V ON ON C	3-2	3-1
MOMENTARY	ON-(ON)	.039 [1]	.315 [8]	.685 [17.4]	.039 [1]	9	1977740-2 MPS103FPC		MPS103F ALCO	AC 3A 125V NO NC C		(3)-(1)
	ON-ON	.098 [2.5]	.331 [8.4]	.744 [18.9]	.098 [2.5]	8	1977740-3 MPS203NPC	DPDT	MPS203N ALCO	AC 3A 125V ON ON C	3-2 6-5	3-1 6-4
MOMENTARY	ON-(ON)	.039 [1]	.315 [8]	.685 [17.4]	.039 [1]	10	1977740-4 MPS203RPC		MPS203R ALCO	AC 3A 125V NO NC C		(3)-(1) (6)-(4)

NOTE: TERMINALS 4,5,6 ARE FOUND ONLY ON DP VERSIONS (-3, -4)

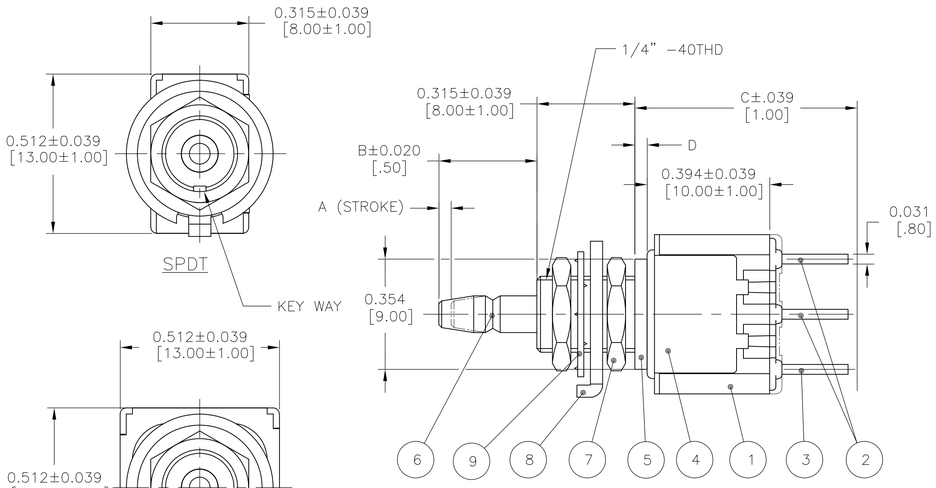

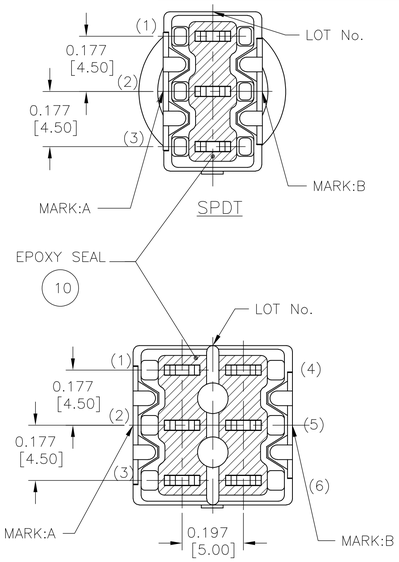

TERMINAL FORM

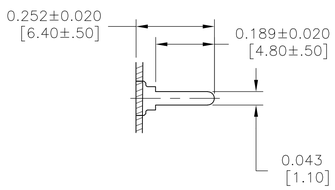

182068-X

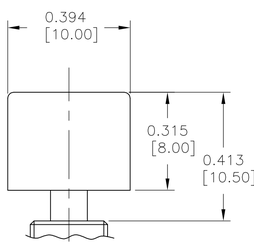

182069-X

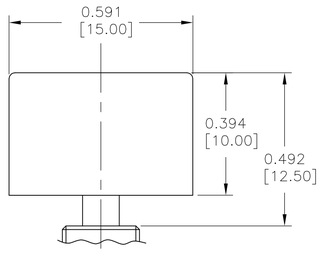

BUTTON CAP

SOLD SEPARATELY

SEE DRAWINGS 1825068 (ø.394 [10 MM]) & 1825069 (ø.591 [15 MM]) FOR COLOR CHOICES

PANEL CUT-OUTS

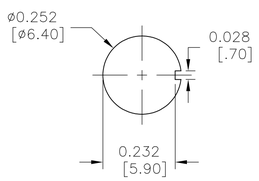

WITHOUT LOCKING RING
MAXIMUM PANEL THICKNESS:
.118 [3mm]

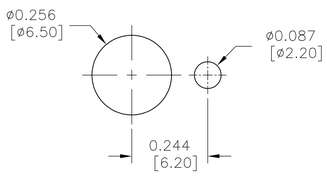

WITH STANDARD LOCKING RING
MAXIMUM PANEL THICKNESS:
.079 [2mm]

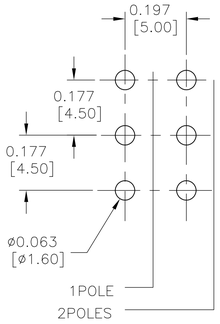

PC BOARD DRILLING

SPECIFICATIONS:

1 RATING: 3A 125V AC (RESISTIVE LOAD)

2 INITIAL CONTACT RESISTANCE: 10mΩ MAX. AT 1A 2~4V DC.

3 INITIAL INSULATION RESISTANCE: 1,000MΩ MIN. AT 500V DC.(BETWEEN TERMINALS AND TERMINAL-GROUND)

4 INITIAL DIELECTRIC STRENGTH: 1,000V AC FOR 1 MINUTE.(BETWEEN TERMINALS AND TERMINAL-GROUND)

5 DURABILITY: 25,000 CYCLES

6 LEAKAGE CURRENT: 500μA MAX.AT RATING VOLTAGE FOR 5 SECONDS.
AFTER ELECTRICAL ENDURANCE (BETWEEN TERMINALS AND TERMINAL-GROUND)

OPERATING FORCE:

7 3.92±1.96N.(400±200gf)

8 $4.9^{+2.94}_{-1.96}$N.(500^{+300}_{-200}gf)

9 2.94±0.98N.(300±100gf)

10 $4.9^{+1.96}_{-0.98}$N.(500^{+200}_{-100}gf)

11 OPERATING TEMP: -20 ~ +85°C
STORAGE TEMP: -40 ~ +85°C

12 ALL MATERIALS AND FINISHES SHALL COMPLY WITH EU DIRECTIVE 2002/95/EC OF 27JAN2003 (ROHS).

13 LASER MARKING USED FOR MARKS.

A/R	A/R	BLUE	-	EPOXY	10
1	1	ZINC PLATE	CARBON TOOL STEEL	TOOTH WASHER	9
1	1	ZINC PLATE	COLD ROLLED STEEL	LOCATING RING	8
2	2	NICKEL PLATE	BRASS	HEX NUT	7
1	1	NICKEL PLATE	BRASS	PLUNGER	6
1	1	NICKEL PLATE	BRASS	MOUNTING SLEEVE	5
1	1	-	STAINLESS STEEL	FRAME	4
2	1	SILVER PLATE	BRASS	COMMON TERMINAL	3
4	2	SILVER PLATE	SILVER + BRASS	FIXED CONTACT	2
1	1	(BLUE)	EPOXY RESIN	CASE	1
2 POLES	1 POLE	FINISH (COLOR)	MATERIALS	PARTS	NO
QTY					

THIS DRAWING IS A CONTROLLED DOCUMENT.

DIMENSIONS: INCHES [mm]

TOLERANCES UNLESS OTHERWISE SPECIFIED:
0 PLC ± -
1 PLC ± -
2 PLC ± -
3 PLC ± .010 [.25]
4 PLC ± -
ANGLES ± -

MATERIAL -
FINISH -

DWN	RAGHAVENDRA	28JAN11
CHK	EPPLEY NAZ	28JAN11
APVD	EPPLEY NAZ	28JAN11
PRODUCT SPEC	-	
APPLICATION SPEC	-	
WEIGHT	-	

TE Connectivity

NAME: MPS SERIES PUSHBUTTON MPS103 (SPDT) & MPS203 (DPDT) PCB TERMINATOIN

SIZE	CAGE CODE	DRAWING NO	RESTRICTED TO
A1	00779	C-1977740	-

CUSTOMER DRAWING | SCALE 4:1 | SHEET 1 OF 1 | REV B2