THIS DRAWING IS UNPUBLISHED. RELEASED FOR PUBLICATION NOV ,2005.
© COPYRIGHT 2005 BY TYCO ELECTRONICS CORPORATION. ALL RIGHTS RESERVED.

LOC	DIST
E	B

REVISIONS

P	LTR	DESCRIPTION	DATE	DWN	APVD
	A	FIRST REVISION	04NOV05	DK	JC

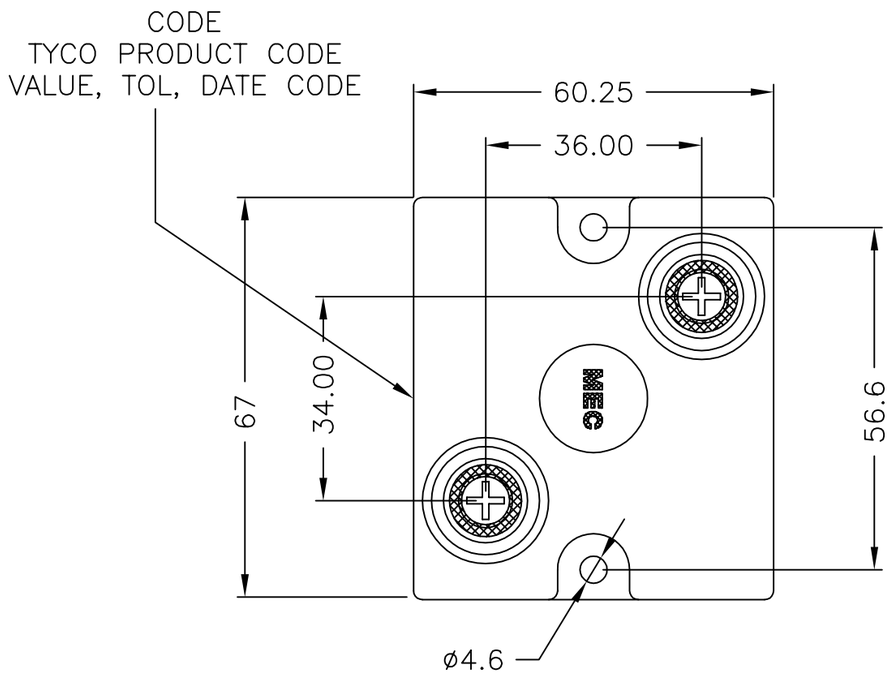

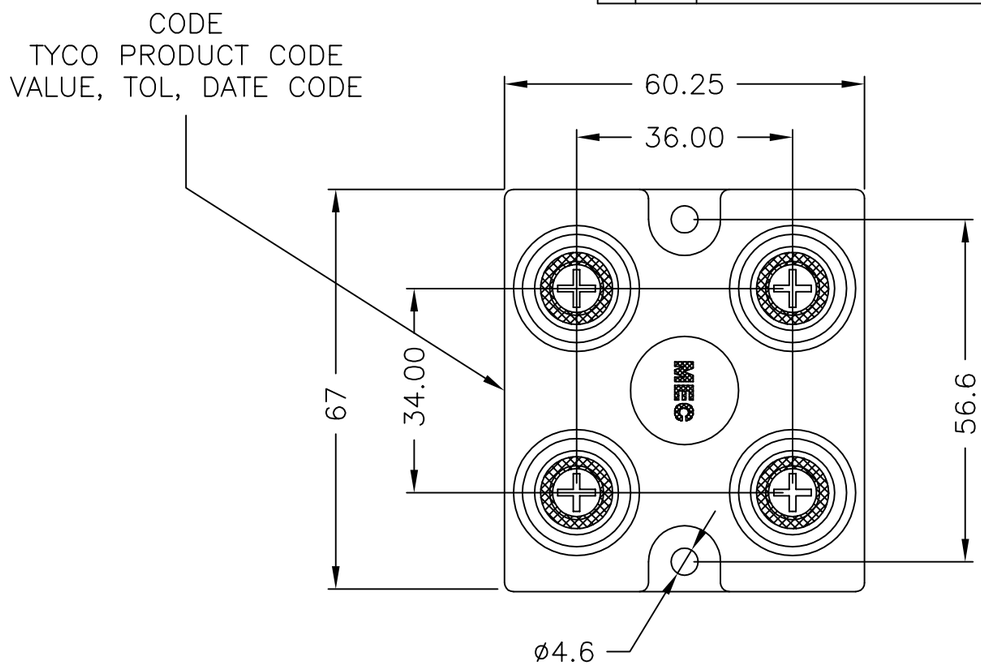

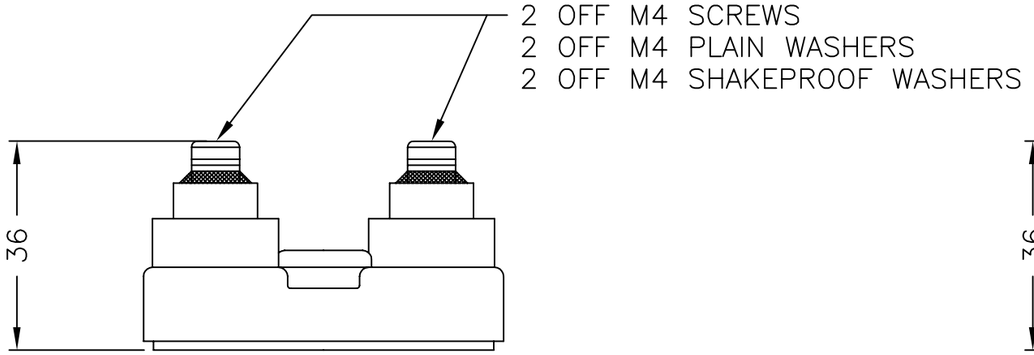

BDS2A250

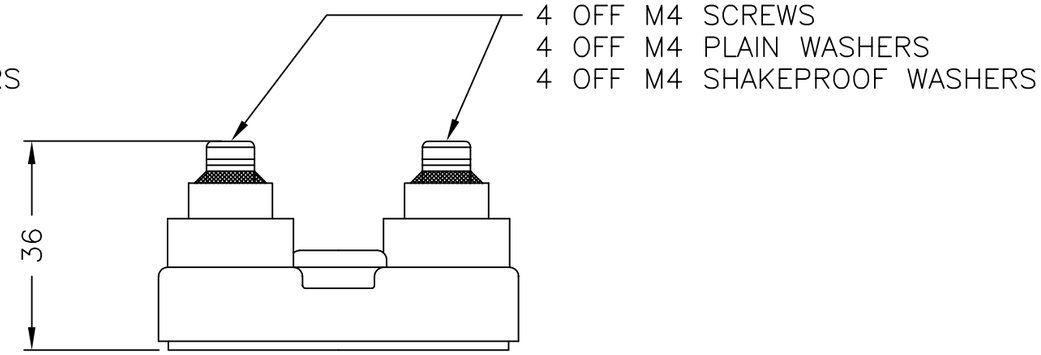

BDS4B250

FOR A SPECIFIC PN FOR A RESISTANCE VALUE AND TOLERANCE, PLEASE REFER TO DMF.

THIS DRAWING IS A CONTROLLED DOCUMENT.

DIMENSIONS: MM

TOLERANCES UNLESS OTHERWISE SPECIFIED:

0 PLC	± 0.5
1 PLC	± 0.2
2 PLC	± 0.1
3 PLC	± –
4 PLC	± –
ANGLES	±5

MATERIAL: –

FINISH: –

DWN	DAVE KENNEDY 03NOV05
CHK	J CATCHPOLE 04NOV05
APVD	J CATCHPOLE 04NOV05
PRODUCT SPEC	–
APPLICATION SPEC	–
WEIGHT	–

tyco Electronics

Tyco Electronics Corporation
Dorcan, Swindon, SN3 5HH

NAME: BDS2A250 & BDS4B250 – –

SIZE	CAGE CODE	DRAWING NO	RESTRICTED TO
A3	00779	C-1614770	–

CUSTOMER DRAWING

SCALE	SHEET	REV
NTS	1 OF 1	A