THIS DRAWING IS UNPUBLISHED. RELEASED FOR PUBLICATION -,- .
© COPYRIGHT – BY TYCO ELECTRONICS CORPORATION. ALL RIGHTS RESERVED.

LOC	DIST
AJ	–

REVISIONS

P	LTR	DESCRIPTION	DATE	DWN	APVD
	B	REV PER 0S14-0113-03	07APR03	KW	KW

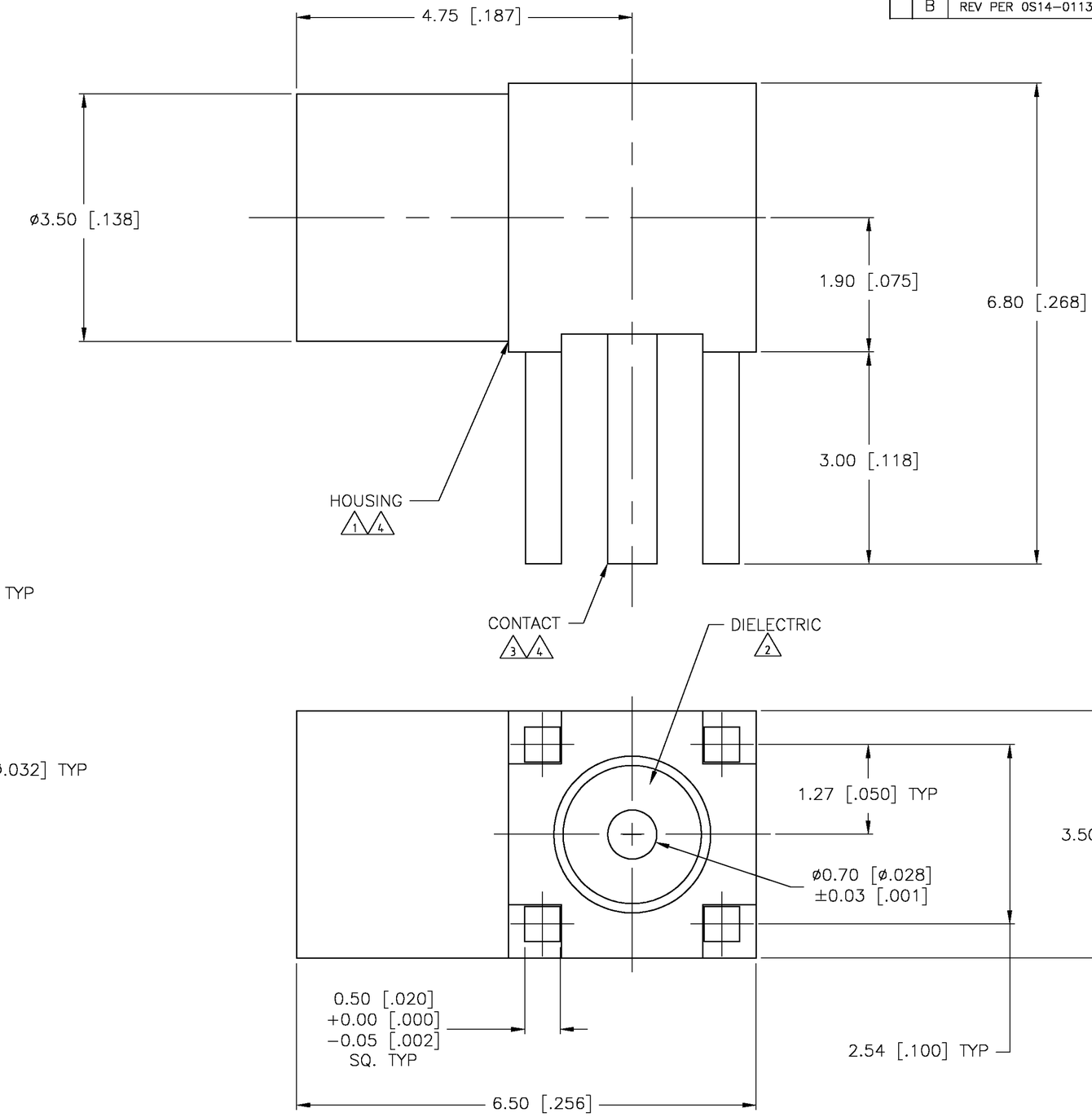

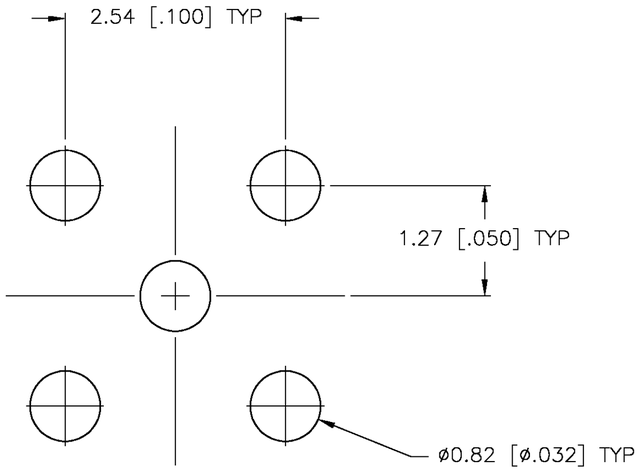

RECOMMENDED PCB LAYOUT
TOLERANCE: ±0.08 [.003]

1. BRASS PER ASTM-B-16
2. PTFE PER ASTM-D-1710
3. BERYLLIUM COPPER PER ASTM-B-196
4. GOLD PLATE PER MIL-G-45204

1408151-1

PART NUMBER

THIS DRAWING IS A CONTROLLED DOCUMENT.

DIMENSIONS: MM [INCHES]

TOLERANCES UNLESS OTHERWISE SPECIFIED:
0 PLC ± –
1 PLC ± –
2 PLC ± 0.15 [.006]
3 PLC ± –
4 PLC ± –
ANGLES ± 5°

MATERIAL –
FINISH –

DWN RMF	21NOV01
CHK RMF	21NOV01
APVD RMF	21NOV01
PRODUCT SPEC	108-2084
APPLICATION SPEC	–
WEIGHT	0.45g/.016oz

tyco Electronics — Tyco Electronics Corporation, Middletown, PA 17057

NAME: MMCX JACK, RIGHT ANGLE, PCB

SIZE	CAGE CODE	DRAWING NO	RESTRICTED TO
A2	00779	C-1408151	–

CUSTOMER DRAWING | SCALE 20:1 | SHEET 1 OF 1 | REV B

1408151