THIS DRAWING IS UNPUBLISHED. RELEASED FOR PUBLICATION 2000

© COPYRIGHT 2000 BY TYCO ELECTRONICS CORPORATION. ALL RIGHTS RESERVED.

LOC	DIST
A1	-

REVISIONS

P	LTR	DESCRIPTION	DATE	DWN	APVD
	B3	RELEASED AS PER ECR-09-005170	05.MAR.2009	GG	TS

PN 0-1 & 2-7

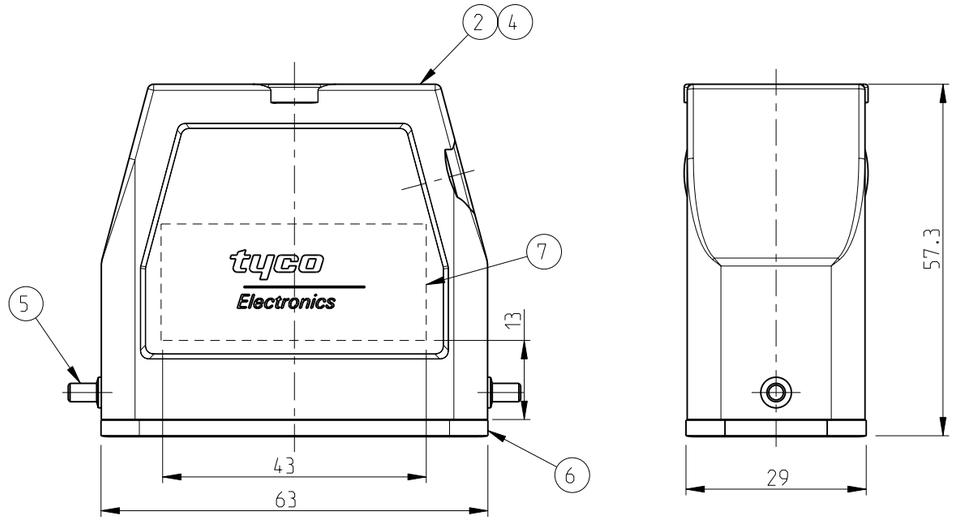

PN 1-2 & 1-7

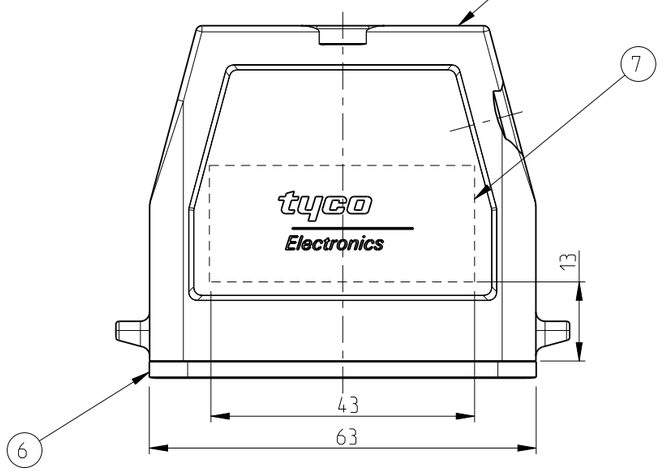

NOTES

1. PACKAGING
   PACKAGING QUANTITY:5 PIECES PER BOX
2. MATERIAL:HOUSING ALUMINIUM DIECASTING ALLOY
3. SURFACE:POWDER COATED-GREY
   CORROSION PROTECTION-BLACK
4. VARNISH ON THE INSIDE NOT NECESSARY

PN 0-1 & 2-7

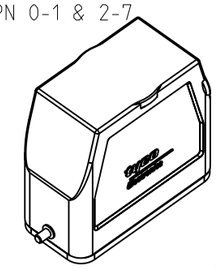

SCALE 1:2

PN 1-2 & 1-7

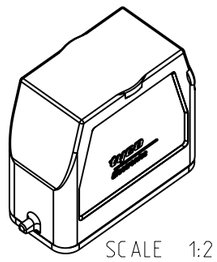

SCALE 1:2

2	2	2	2	INSULATING TAPE	COROPLAST TYP 303	-	GREY	7	PVC-SOFT
1	1	1	1	PROFILE SEAL	NEOPRENE	-	BLACK	6	-
2	-	-	2	CLIP BOLT	STAINLES STEEL	BLANK	-	5	-
1	-	-	-	HOOD	ALUMINIUM	HARD COAT	BLACK	4	-
-	1	-	-	HOOD	ALUMINIUM	-	GREY	3	-
-	-	-	1	HOOD	ALUMINIUM	HARD COAT	ALU COLORED	2	-
-	-	1	-	HOOD	ALUMINIUM	WITHOUT VARNISH	-	1	-
2-7	1-7	1-2	0-1	DESCRIPTION	MATERIAL	SURFACE	COLOR	ITEM NO	REMARKS
			HA-K.10.STS.1.16.G			1 PACKAGING			
		HA.10.STS.1.16.G				1 PACKAGING			
	HA.10.STS.1.16.G					1 PACKAGING			
HA-K.10.STS.1.16.G						1 PACKAGING			

THIS DRAWING IS A CONTROLLED DOCUMENT FOR TYCO ELECTRONICS CORPORATION IT IS SUBJECT TO CHANGE AND THE CONTROLLING ENGINEERING ORGANIZATION SHOULD BE CONTACTED FOR THE LATEST REVISION.

DIMENSIONS: mm

TOLERANCES UNLESS OTHERWISE SPECIFIED:
n.ISO 8015:
n.ISO 2768-mH-E:
n.DIN 16901-120:

0 PLC	±
1 PLC	±
2 PLC	±
3 PLC	±
4 PLC	±
ANGLES	±

MATERIAL 2

FINISH 3

DWN	S.KUMAR 23/02/2006
CHK	R.SRINIVAS 23/02/2006
APVD	T.SCHNURPFEIL 23/02/2006
PRODUCT SPEC	108-74009
APPLICATION SPEC	114-74001
WEIGHT	-

Tyco Electronics

Tyco Electronics, AMP.GmbH
53757 Sankt Augustin, Germany

NAME
HOOD
HA.10.STS.1.16.G

SIZE	CAGE CODE	DRAWING NO	RESTRICTED TO
A3	00779	C-1102117	

CUSTOMER DRAWING

SCALE	SHEET	REV
1:1	1 OF 1	B3