

SUNON

AC CORD

Power cord with straight connector

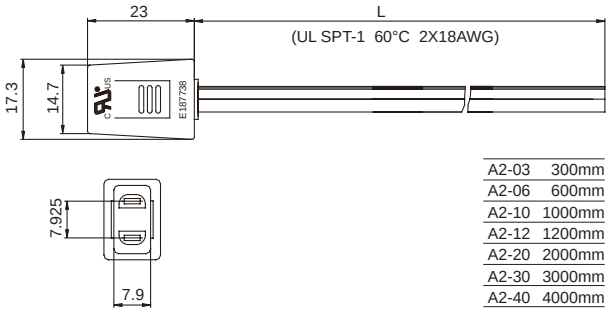

A2-03	300mm
A2-06	600mm
A2-10	1000mm
A2-12	1200mm
A2-20	2000mm
A2-30	3000mm
A2-40	4000mm

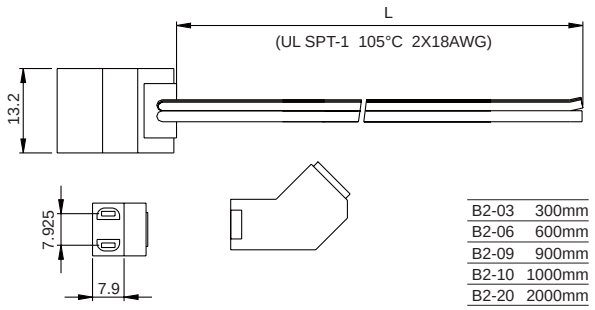

B2-03	300mm
B2-06	600mm
B2-09	900mm
B2-10	1000mm
B2-20	2000mm

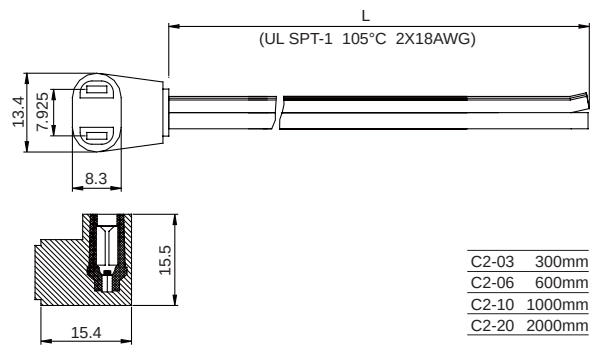

C2-03	300mm
C2-06	600mm
C2-10	1000mm
C2-20	2000mm

A2-A

(unit : mm)

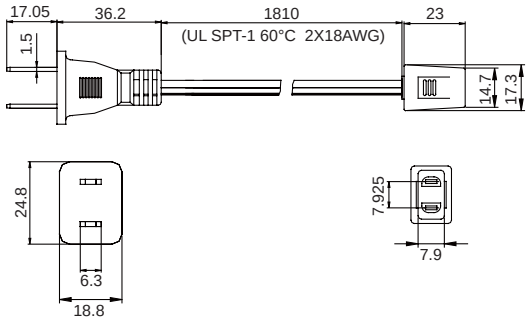

A2-B

(unit : mm)

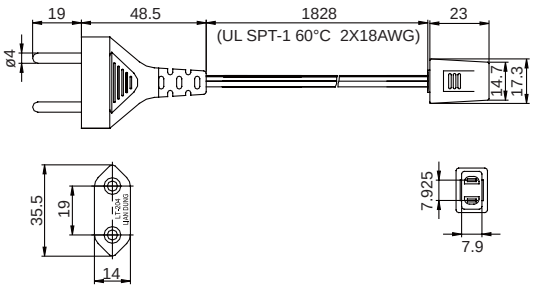



SUNON

AC CORD

A3-A

(unit : mm)

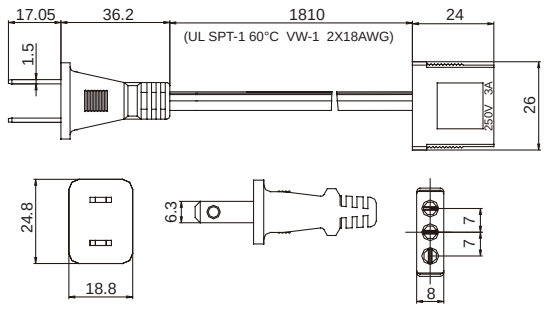

B2-C

(unit : mm)

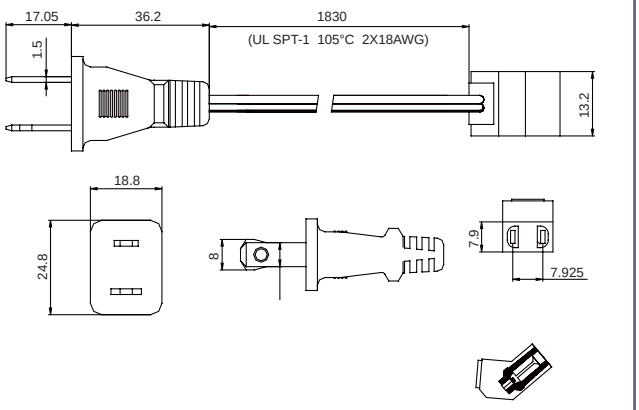

A3-B

(unit : mm)

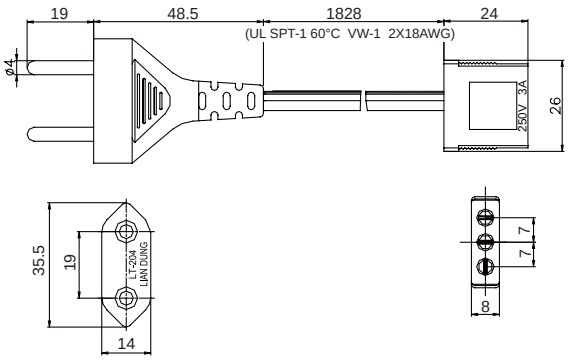

C2-D

(unit : mm)

