TA35 Rocker 1 Pole

Circuit Breaker for Equipment thermal, Rocker actuation, 1 pole



See below:
Approvals and Compliances

Description

- Thermal circuit breaker
- 1-pole
- Snap-in version
- Positively trip-free release
- Different rocker colours
- High configurability
- Wide current range

Applications

- Power tools
- Industrial appliances
- Equipment for construction
- Cleaning equipment
- Commercial and household kitchen appliances

Weblinks

pdf datasheet, html-datasheet, General Product Information, Distributor-Stock-Check, Detailed request for product, Product News

Technical Data

Rated Voltage AC	240 V; 50/60 Hz
Rated Voltage DC	32 V
Rated current range AC	0.05 - 20 A
Conditional short circuit capacity	0.05...20 A: 2 kA, SC (C1) @ 240 VAC
Degree of Protection	from front side IP 40 acc. to IEC 60529
Dielectric Strength	50 Hz: > 2.5 kV Impulse 1.2/50 µs: > 4 kV
Insulation Resistance	500 VDC > 100 MΩ
Lifetime	mechanical: 50'000 switching cycles
	AC: 1 x Ir, cos φ 0.6: 30'000 switching cycles
	DC: 1 x Ir, L/R = 2 - 3 ms: 50'000 switching cycles

Overload	IEC: min. 40 trips @ 6 x Ir, cos φ 0.6
	UL / CSA: min. 50 trips @ 1.5 x Ir, cos φ 0.75
Ambient temperature	-30 °C to 60 °C
Vibration Resistance	± 0.75 mm @ 10 - 60 Hz acc. to IEC 60068-2-6, test Tc 10 G @ 60 - 500 Hz acc. to IEC 60068-2-6, test Tc
Shock Resistance	30 G / 18 ms acc. to IEC 60068-2-27, test Ea
Tripping Type	Thermal
Actuation Type	Rocker
Weight	16.5 - 18.5 g

Approvals and Compliances

Detailed information on product approvals, code requirements, usage instructions and detailed test conditions can be looked up in Details about Approvals

Approvals

The approval mark is used by the testing authorities to certify compliance with the safety requirements placed on electronic products.

Approval Reference Type: TA35

Approval Logo	Certificates	Certification Body	Description
	VDE Approvals	VDE	VDE Certificate Number: 40019754
	UL Approvals	UL	UL File Number: E71572
	CQC Approvals	CQC	CCC Certificate Number: 2013010307598660

Product standards

Product standards that are referenced

Organization	Design	Standard	Description
IEC	Designed according to	IEC 60934	Circuit-breakers for equipment (CBE)
UL	Designed according to	UL 1077	Standard for Supplementary Protectors for Use in Electrical Equipment
CSA Group	Designed according to	CSA C22.2 No. 235	Supplementary Protectors
CCC	Designed according to	GB 17701	Circuit-breaker for equipment

Application standards

Application standards where the product can be used

Organization	Design	Standard	Description
IEC	Designed for applications acc.	IEC/UL 60950	IEC 60950-1 includes the basic requirements for the safety of information technologyequipment.

Compliances

The product complies with following Guide Lines

Identification	Details	Initiator	Description
CE	CE declaration of conformity	SCHURTER AG	The CE marking declares that the product complies with the applicable requirements laid down in the harmonisation of Community legislation on its affixing in accordance with EU Regulation 765/2008.
RoHS	RoHS	SCHURTER AG	EU Directive RoHS 2011/65/EU
50	China RoHS	SCHURTER AG	The law SJ / T 11363-2006 (China RoHS) has been in force since 1 March 2007. It is similar to the EU directive RoHS.
REACH	REACH	SCHURTER AG	On 1 June 2007, Regulation (EC) No 1907/2006 on the Registration, Evaluation, Authorization and Restriction of Chemicals 1 (abbreviated as "REACH") entered into force.

Dimension [mm]

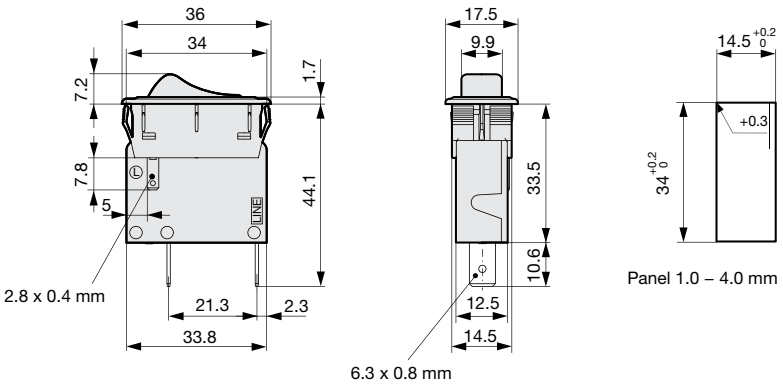

Diagrams

1-pole, 1 bimetal, illuminated

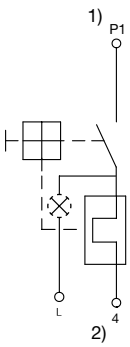

1) Line, 2) Load
Codepos AAA = C2F, C4F, C7F, C8F, C9F

1-pole, 1 bimetal, non illuminated

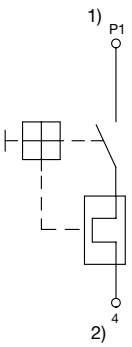

1) Line, 2) Load
Codepos AAA = CFT, CGT

The keys / codepos are listed in the key table of the basic function for selection.

Approval		Rated current	Rated voltage AC	Rated voltage DC
c UL us	UL 1077	0.05...20 A	240 V	32 V
c UL us	CSA C22.2 235	0.05...20 A	240 V	32 V
VDE	IEC 60934	0.05...20 A	240 V	32 V
CCC	GB 17701	0.05...20 A	240 V	32 V

Typical internal resistance

Rated Current [A]	Internal Resistance [Ω]
0.05	200.000
0.1	70.000
0.5	2.750
1.0	0.720
1.5	0.340
2.0	0.187
2.5	0.115
2.8	0.089
3.0	0.059
4.0	0.059
5.0	0.044
6.0	0.028
7.0	0.0142
8.0	0.0142
10.0	0.0109
12.0	0.0086
13.0	0.0072
14.0	0.0072
15.0	0.0056
16.0	0.0056
18.0	0.0052
20.0	0.0052

Effect of ambient temperature

The units are calibrated for an ambient temperature of +23°C. To determine the rated current for a lower or higher ambient temperature, use a correction factor (typical value) from the table below:

Ambient temperature [°C]	Correction factor
-30	0.77
-20	0.81
0	0.90
+23	1.00
+40	1.03
+50	1.04
+60	1.06

Example: Rated current = 5 A; Environmental temperature = 50 °C; --> Correction factor = 1.04; Resulting current = 5.2 A --> Fount to next higher rated current: 6 A

Time-Current-Curves

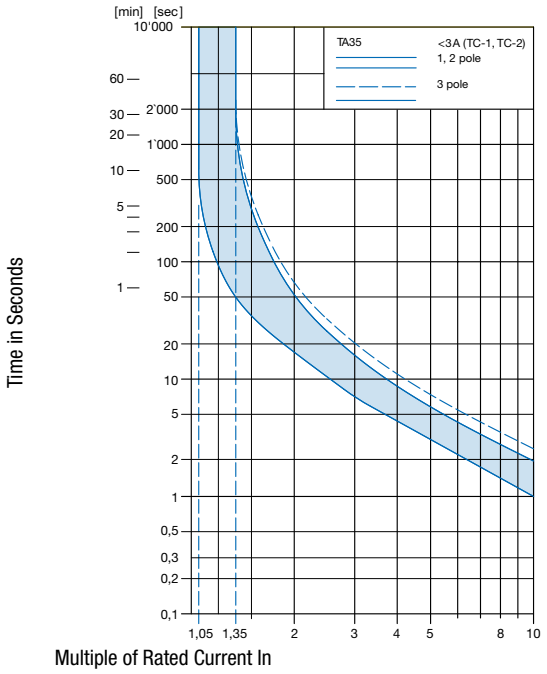

Reference Temperature +23°

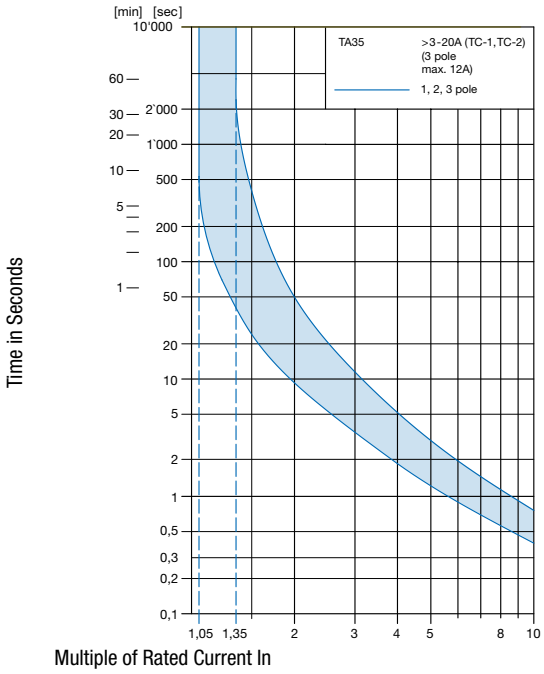

Reference Temperature +23°

Config. Code

TA35 - CBD B F 120 C0 - CZMXX

The characters are placeholders for the correspondingly keys of selections from the key tables.

TA35 - **CBD** B F 120 C0 - CZMXX = Basic function

Basic function	Configuration key
1-pole, 1 bimetal, illuminated 240 V	C2F
1-pole, 1 bimetal, illuminated 120 V	C4F
1-pole, 1 bimetal, illuminated 24 V	C7F
1-pole, 1 bimetal, illuminated 12 V	C8F
1-pole, 1 bimetal, illuminated 5 V	C9F
1-pole, 1 bimetal, without illumination	CFT
1-pole, 1 bimetal, momentary switch, without illumination	CGT

TA35 - CBD **B** F 120 C0 - CZMXX = Rocker colour

Rocker colour	Configuration key
Clear transparent	1
Red transparent	3
Green transparent	4
Orange transparent	6
Blue transparent	7
Black	B
Green	G
Red	R
White	W
Orange	X
Yellow	Y

TA35 - CBD B **F** 120 C0 - CZMXX = Legend

Legend		Configuration key
embossed	– o	F
white printed	ON OFF	H
black printed	ON OFF	K
white printed	– o	L
black printed	– o	M

TA35 - CBD B F **120** C0 - CZMXX = Rated current

Rated current	Configuration key
without thermal overload protection / temporarily without VDE approval	C00
0.05 A	Z05
0.1 A	J01
0.2 A	J02
0.3 A	J03
0.4 A	J04

Other rated currents on request

Rated current	Configuration key
0.5 A	J05
0.8 A	J08
1.0 A	J10
1.2 A	J12
1.5 A	J15
2.0 A	J20
2.5 A	J25
3.0 A	030
3.5 A	035
4.0 A	040
5.0 A	050
6.0 A	060
7.0 A	070
8.0 A	080
10.0 A	100
12.0 A	120
13.0 A	130
14.0 A	140

Other rated currents on request

Rated current	Configuration key
15.0 A	150
16.0 A	160
18.0 A	180
20.0 A	200

Other rated currents on request

TA35 - CBD B F 120 **C0** - CZMXX **= Reserve**

Reserve	Configuration key
reserve	C0

TA35 - CBD B F 120 C0 - **CZMXX** **= Accessories**

Factory mounted accessories	Configuration key
Without cover	

For subsequent fitting accessories see:

http://www.schurter.com/pdf/english/typ_TA35_Accessories.pdf

All Variants

Basic function	Rocker colour	Legend	Rated current	Accessories	Config. Code	Order Number
1-pole, 1 bimetal, without illumination	White	black printed	2.0 A	Without cover	TA35-CFTWKJ20C0	4435.0029
1-pole, 1 bimetal, without illumination	White	embossed	3.0 A	Without cover	TA35-CFTWF030C0	4435.0019
1-pole, 1 bimetal, without illumination	White	black printed	3.0 A	Without cover	TA35-CFTWM030C0	4435.0082
1-pole, 1 bimetal, illuminated 120 V	Red transparent	white printed	3.0 A	Without cover	TA35-C4F3H030C0	4435.0431
1-pole, 1 bimetal, without illumination	Red	black printed	3.0 A	Without cover	TA35-CFTRM030C0	4435.0481
1-pole, 1 bimetal, without illumination	Black	embossed	4.0 A	Without cover	TA35-CFTBF040C0	4435.0028
1-pole, 1 bimetal, without illumination	Black	embossed	5.0 A	Without cover	TA35-CFTBF050C0	4435.0173
1-pole, 1 bimetal, without illumination	Black	white printed	5.0 A	Without cover	TA35-CFTBH050C0	4435.0204
1-pole, 1 bimetal, without illumination	Black	white printed	6.0 A	Without cover	TA35-CFTBH060C0	4435.0205
1-pole, 1 bimetal, without illumination	Red	embossed	10.0 A	Without cover	TA35-CFTRF100C0	4435.0056
1-pole, 1 bimetal, without illumination	Black	embossed	10.0 A	Without cover	TA35-CFTBF100C0	4435.0174
1-pole, 1 bimetal, momentary switch, without illumination	Black	embossed	10.0 A	Without cover	TA35-CGTBF100C0	4435.0471
1-pole, 1 bimetal, without illumination	White	embossed	13.0 A	Without cover	TA35-CFTWF130C0	4435.0049
1-pole, 1 bimetal, without illumination	White	embossed	15.0 A	Without cover	TA35-CFTWF150C0	4435.0037
1-pole, 1 bimetal, without illumination	Black	embossed	15.0 A	Without cover	TA35-CFTBF150C0	4435.0137
1-pole, 1 bimetal, without illumination	Black	white printed	16.0 A	Without cover	TA35-CFTBH160C0	4435.0209
1-pole, 1 bimetal, without illumination	Black	embossed	16.0 A	Without cover	TA35-CFTBF160C0	4435.0300
1-pole, 1 bimetal, without illumination	Black	white printed	20.0 A	Without cover	TA35-CFTBL200C0	4435.0256

Most Popular.

Availability for all products can be searched real-time:https://www.schurter.com/en/Stock-Check/Stock-Check-SCHURTER

Packaging Unit 20 Pcs

Accessories

	Description
	TA35 Accessories Screw-on collar with cover, IP65

19.01.2018

The specifications, descriptions and illustrations indicated in this document are based on current information. All content is subject to modifications and amendments. Information furnished is believed to be accurate and reliable. However, users should independently evaluate the suitability and test each product selected for their own applications.