T12-211

Circuit Breaker for Equipment thermal, Threaded neck type, Reset type, Quick connect terminals



Description
- Threaded neck type
- Thermal circuit breaker
- 1-pole
- Reset type
- Quick connect terminals 6.3 x 0.8 mm

Unique Selling Proposition
- Compact design
- Positively trip-free release
- Available with cover
- Different mounting possibilities

Standards
- IEC 60934
- UL 1077
- CSA C22.2 No. 235
- GB 17701

Applications
- Power supplies
- Uninterruptible power supply
- Power tools
- Household appliances

Weblinks
pdf-datasheet, html-datasheet, General Product Information, Approvals, CE declaration of conformity, RoHS, CHINA-RoHS, REACH, Distributor-Stock-Check, Detailed request for product, Product News

Technical Data

Rated Voltage AC	240 V; 50/60 Hz
Rated Voltage DC	28 V
Rated current range AC	0.05 - 15/16 A , see approbations
Conditional short circuit capacity	IEC: Inc, PC1, AC 240 V: 1 kA
Short circuit capacity Icn	at In < 7 A/240 VAC : 8 x In
	at In ≥ 7 A/240 VAC : 200 A
	AC/DC 28 V : 400 A
Degree of Protection	from front side IP 40 acc. to IEC 60529
Dielectric Strength	50 Hz: > 1.5 kV Impulse 1.2/50 µs: > 2.5 kV
Insulation resistance	500 VDC > 100 MΩ
Endurance typical	2 x Ir: 5000 switching cycles
Endurance minimum	Reset type AC : 2 x Ir , cos φ 0.6 : DC : 2 x Ir , L/R = 2 - 3 ms : 50 switching cycles

Overload	IEC: min. 40 trips @ 6 x Ir, cos φ 0.6
	UL / CSA: min. 50 trips @ 1.5 x Ir, cos φ 0.75
Ambient temperature	-5 °C to 60 °C
Vibration Resistance	± 1.5 mm @ 10 - 60 Hz acc. to IEC 60068-2-6, test Fc 10 G @ 60 - 500 Hz acc. to IEC 60068-2-6, test Fc
Shock Resistance	100 G / 6 ms acc. to IEC 60068-2-27, test Ea
Tripping Type	Thermal
Actuation type	Reset type
Weight	ca. 10 g

Dimension
T12-211

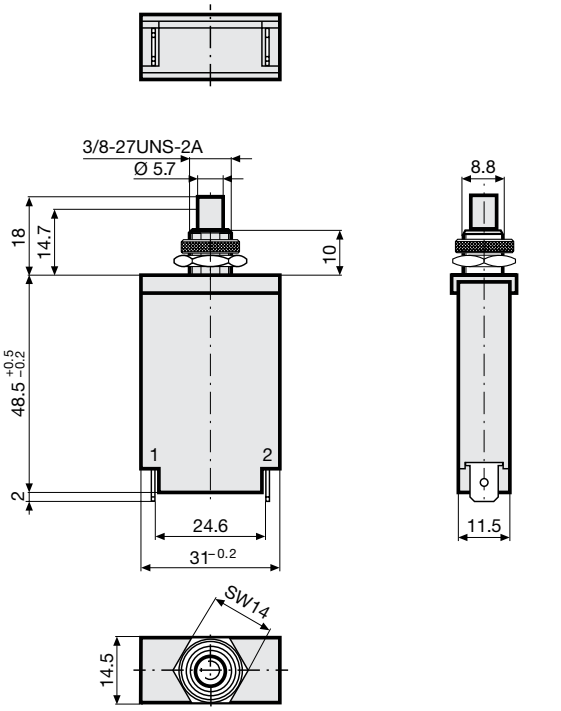

T12-211SN

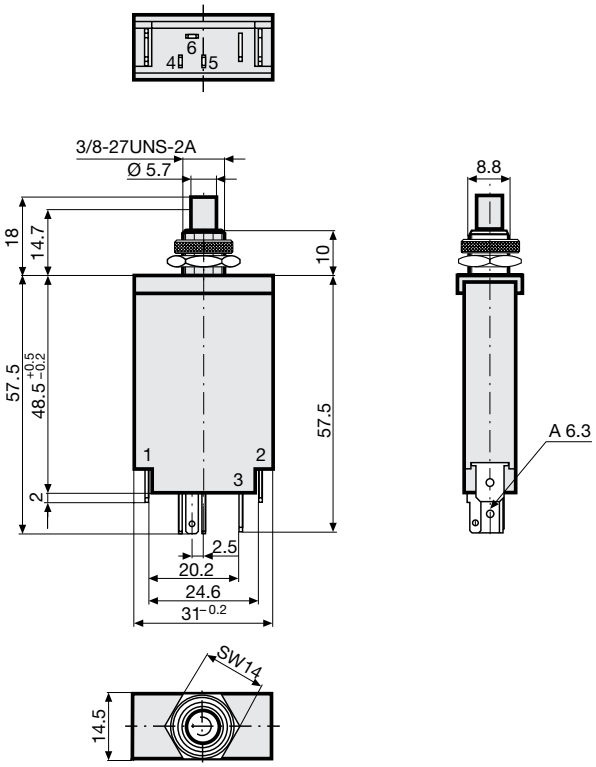

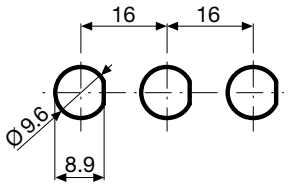

Diagrams

Tap 4,8 x 0,8 mm

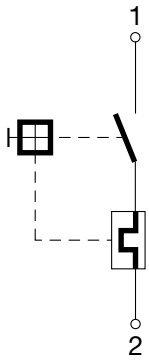

Tap 4,8 x 0,8 mm

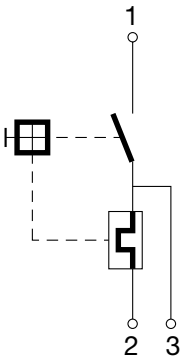

Tap 4,8 x 0,8 mm

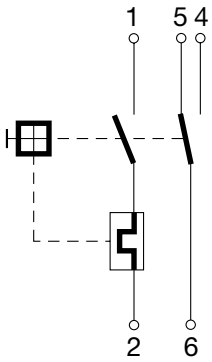

Tap 4,8 x 0,8 mm

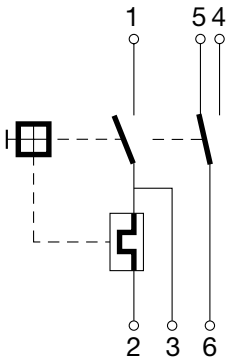

Approval		Main circuit			Auxiliary circuit		
		Rated current	Rated voltage AC	Rated voltage DC	Rated current	Rated voltage AC	Rated voltage DC
c UL us	UL 1077 CSA C22.2 No. 235	0.05...15 A	240 V	28 V	2 A 3 A	120 V -	- 28 V
	CSA C22.2 No. 235	0.3...16 A	240 V	28 V	1 A	240 V	-
	IEC 60934	0.05...16 A	240 V	28 V	1 A	240 V	28 V
	GB 17701	0.05...16 A	240 V	28 V	1 A	240 V	28 V

Typical internal resistance

Rated Current [A]	Internal Resistance [Ω]
0.05	225.000
0.50	3.300
1.00	0.880
2.00	0.267
3.00	0.128
4.00	0.073
5.00	0.040
6.00	0.031
7.00	0.018
8.00	0.018
9.00	0.010
10.00	0.0087
11.00	0.0087
12.00	0.0087
13.00	0.0087
14.00	0.0070
15.00	0.0070
16.00	0.0055

Effect of ambient temperature

The units are calibrated for an ambient temperature of +23°C. To determine the rated current for a lower or higher ambient temperature, use a correction factor (typical value) from the table below:

Ambient temperature [°C]	Correction factor
-5	0.87
0	0.90
10	0.95
23	1.00
30	1.05
40	1.12
50	1.20
60	1.30

Example: Rated current = 5 A; Environmental temperature = 50 °C; --> Correction factor = 1.2; Resulting current = 6.0 A

Time-Current-Curves

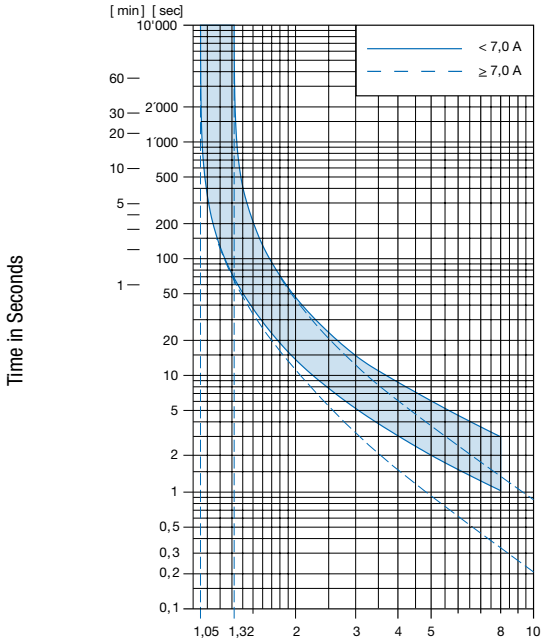

Reference Temperature +23°

Config. Code

T12 - 1 2 3 A B C - 1.23

The characters are placeholders for the correspondingly keys of selections from the key tables.

T12 - **1** 2 3 A B C - 1.23 = Mounting

Mounting	Configuration key
Threaded neck type with hexagonal- and knurled nut	2

T12 - 1 **2** 3 A B C - 1.23 = Actuation type

Actuation type	Configuration key
Reset type	1

T12 - 1 2 **3** A B C - 1.23 = Terminal

Terminal	Configuration key
Quick connect terminal 6.3x0.8mm	1

T12 - 1 2 3 **A** B C - 1.23 = Auxiliary contact

Auxiliary contact	Configuration key
Auxiliary contact	S

T12 - 1 2 3 A **B** C - 1.23 = Shunt terminal

Shunt terminal	Configuration key
Shunt terminal	N

T12 - 1 2 3 A B **C** - 1.23 = Setting indication

Setting indication	Configuration key
Setting indication	R

T12 - 1 2 3 A B C - **1.23** = Rated current

Rated current	Configuration key
0.05 A	0.05
0.1 A	0.1
0.15 A	0.15
0.2 A	0.2
0.3 A	0.3
0.4 A	0.4
0.5 A	0.5
0.6 A	0.6
0.7 A	0.7
0.8 A	0.8
0.9 A	0.9
1.0	1
1.1 A	1.1
1.2 A	1.2
1.3 A	1.3
1.4 A	1.4

Other rated currents on request

Rated current	Configuration key
1.5 A	1.5
1.6 A	1.6
1.7 A	1.7
1.8 A	1.8
1.9 A	1.9
2.0 A	2
2.1 A	2.1
2.3 A	2.3
2.5 A	2.5
2.8 A	2.8
3.0 A	3
3.3 A	3.3
3.5 A	3.5
4.0 A	4
4.5 A	4.5
5.0 A	5

Other rated currents on request

Rated current	Configuration key
5.5 A	5.5
6.0	6
6.5 A	6.5
7.0 A	7
7.5 A	7.5
8.0 A	8
8.5 A	8.5
9.0 A	9
9.5 A	9.5
10.0 A	10
11.0 A	11
12.0 A	12
13.0 A	13
14.0 A	14
15.0 A	15
16.0 A	16

Other rated currents on request

Variants

Rated current	Construction variants			Config. Code	Order Number
	Auxiliary contact	Shunt terminal	Setting indication		
12.0 A				T12-211-12	4410.0019
0.8 A	●			T12-211S-0.8	4410.0044
2.5 A	●			T12-211S-2.5	4410.0046
10.0 A				T12-211-10	4410.0106
6.5 A	●			T12-211S-6.5	4410.0264
1.0	●	●	●	T12-211SNR-1	4410.0655

Most Popular.

Availability for all products can be searched real-time:http://www.schurter.com/Stock-Check/Stock-Check-SCHURTER

Packaging Unit 20 Pcs

Accessories

	Description
	T-Linie Zubehör Accessories to T-Line

13.10.2016

The specifications, descriptions and illustrations indicated in this document are based on current information. All content is subject to modifications and amendments. Information furnished is believed to be accurate and reliable. However, users should independently evaluate the suitability and test each product selected for their own applications.