PSE NO 16

Piezo Switch N.O.



PSE M16

Description
- Available in version Standard and lettered, from diameter 22 mm with Point Illumination or Ring Illumination
- Multicolor: flexible input voltage from 5 - 28 VDC at constant brightness
- with color combination RGB and RGY
- 7 possible colors with RGB configuration
- 3 possible colors with RGY configuration
- Assembly by mounting with nut
- Pins, Wire, Crimp Terminal male or Cable with Faston

Unique Selling Proposition
- Variety of design options regarding size, colour, shape, connection or lettering
- High reliability, long lifetime with more than 20 mill. actuations
- With multicolor ring illumination

Approvals
- EMC: EMC directive 2004/108/EWG
- DGUV Test Certificate: FW 11040 Requirements for Food Processing Equipment
- MIL-STD Certificate Number: 202F Method 107G, 202F Method 204D, 202F Method 213B, 416D Method RS103, 810E Method 501.3, 810E Method 502.3, 810E Method 507.3
- VDE Certificate Number: DIN EN 61000-4-2, DIN EN 61000-4-4, DIN EN 61000-4-5

Characteristics
- Housing material types: plastic, aluminum or stainless steel, ring illuminated version additionally made of polyamide
- For use in harsh environments, both indoors and outdoors

Other versions on request
- switch for longer switching signal duration, type: PSE IV
- switch for explosion proof applications, type: PSE EX
- switch with enhanced vandal proof protection, type: PSE HI
- as keypad, type: Piezo Keypad

References
Alternative: switch with prolonged signal: PSE AE 16; PSE AE 30; PSE IV 19
Alternative: switch vandal improved: PSE HI 22
Alternative: switch for EX proved applications: PSE EX 16; PSE EX 19; PSE EX 22
Alternative: Other diameter PSE NO 24; PSE NO 27; PSE NO 30

Weblinks
html-datasheet, General Product Information, CE declaration of conformity, RoHS, CHINA-RoHS, CAD-Drawings, Product News, Detailed request for product

Technical Data

Electrical Data	
Switching Function	N.O.
Supply Voltage	12 / 24 VDC Ring Illumination, 24 VDC Point Illumination,
Supply Voltage Multicolor	5 - 28 VDC
Switching Voltage	max. 42 / 60 VAC/DC
Switching Current	max. 100 mA
Rated Breaking Capacity	1 W
Lifetime	20 million at Rated Switching Capacity
Switch Resistance OFF	> 10 MΩ
Switch Resistance ON	< 20 Ω actuated (Ta = 25°C)
Capacity	5 nF
N.O. Closing Impulse Duration	20- 1000 ms depending on actuating force, time and speed
Contact Configuration	free polarity

Mechanical Data	
Actuating Force	≤ 3 N at ambient temperature
Actuating Travel	0.002 mm
Shock Protection	IK 02
Tightening Torque	2.5 Nm
Climatical Data	
Operating Temperature	-40 to +85 °C
Storage Temperature	-40 to +85 °C
IP-Protection	IP 67 acc. to IEC 60529, IP 69K acc. to DIN 40050-9
Environmental Assessment	55°C / 93% r.h. acc. to DIN EN 60068-2-30
Salt Spray Test (acc. to DIN 50021-SS)	24 h / 48 h / 96 h Residence Time
Material	
Housing (depending on type)	Stainless Steel, Aluminium anodized, Polyamide
Actuating Area / Insert (with Ring Illumination)	Stainless Steel, Aluminium anodized
Illuminated Ring (Ring Illumination)	Polyamide

Dimension

PSE M16 with Pins

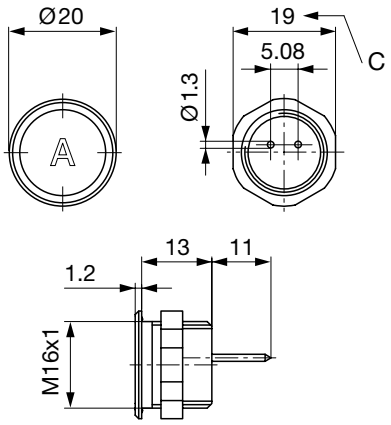

PSE M16 with Crimp Terminal male

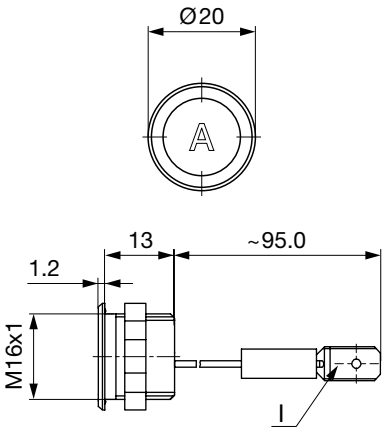

PSE M16 with AMP

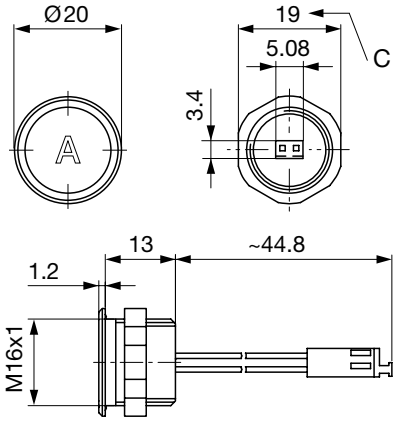

PSE M16 with stranded wire

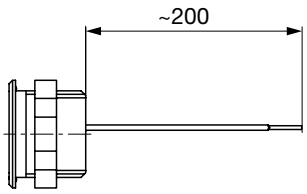

Version available on request

Design actuating area

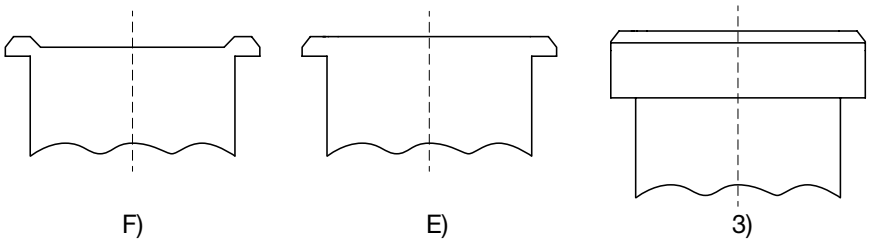

Legend:
A = Illumination Area
B = Actuating Area
C = Width Across Flats
I = Crimp Terminal male 6.3 x 0.8
PI = Point Illumination
RI = Ring Illumination

Lettering:
- either with/without lettering
- position of the connections with respect to the position of the lettering is not defined

F) with finger guidance
E) without finger guidance
3) elevated front design: M19 (standard, others on request)

Dimension

PSE M16

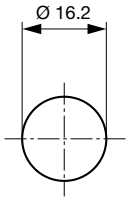

Drilling diagram

Lettering

The last three digits in the order number define the lettering:	
001-076	Standard Lettering
101-	Customized Lettering

Lettering - Aluminium / Plastic Material

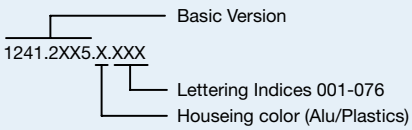

Lettering - Stainless Steel

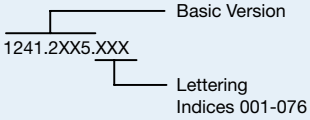

Lettering Colour of Laser Lettering

Material	Lettering Colour		
Stainless Steel	black	Filled letters	
Aluminum natural anodized	light grey	Filled letters	(only after customer approval)
Aluminum coloured anodized	light grey	Filled letters	

Order Index Lettering

Laser Marking			
001 = **A**	021 = **U**	041 = ÷	061 = **EIN**
002 = **B**	022 = **V**	042 = ✳	062 = **AUS**
003 = **C**	023 = **W**	043 = **=**	063 = **AUF**
004 = **D**	024 = **X**	044 = #	064 = **AB**
005 = **E**	025 = **Y**	045 = ↔	065 = **ON**
006 = **F**	026 = **Z**	046 = ↕	066 = **OFF**
007 = **G**	027 = **0**	047 = →	067 = **UP**
008 = **H**	028 = **1**	048 = ←	068 = **DOWN**
009 = **I**	029 = **2**	049 = ↓	069 = **HIGH**
010 = **J**	030 = **3**	050 = ↑	070 = **LOW**
011 = **K**	031 = **4**	051 = %	071 = **ON/OFF**
012 = **L**	032 = **5**	052 = √	072 = **START**
013 = **M**	033 = **6**	053 = **CTRL**	073 = **RESET**
014 = **N**	034 = **7**	054 = **RETURN**	074 =
015 = **O**	035 = **8**	055 = **SHIFT**	075 =
016 = **P**	036 = **9**	056 = **LOCK**	076 =
017 = **Q**	037 = **+**	057 = **STOP**	077 =
018 = **R**	038 = **-**	058 = **ENTER**	
019 = **S**	039 = **.**	059 = **BACK**	
020 = **T**	040 = x	060 = **LINE**	

All Variants

Mounting Diameter	Terminal	Housing Material, Torsion Protection	Colour of Housing	Actuator area	Illumination, LED	Config. Code	Order Number
16	Faston	Aluminum ,no	red	F	non-illuminated	PSE M 16 NO Alu/St	1241.3000
16	Faston	Aluminum ,no	green	F	non-illuminated	PSE M 16 NO Alu/St	1241.3001
16	Faston	Aluminum ,no	black	F	non-illuminated	PSE M 16 NO Alu/St	1241.3002
16	Faston	Aluminum ,no	Alu natural	F	non-illuminated	PSE M 16 NO Alu/St	1241.3003
16	Faston	Plastics ,no	red	F	non-illuminated	PSE M 16 NO Pl	1241.2354
16	Faston	Plastics ,no	white	F	non-illuminated	PSE M 16 NO Pl	1241.2355
16	Faston	Plastics ,no	Alu natural	F	non-illuminated	PSE M 16 NO Pl	1241.2356
16	Faston	Plastics ,no	black	F	non-illuminated	PSE M 16 NO Pl	1241.2357
16	Flexible wire	Aluminum ,no	gold	F	non-illuminated	PSE M 16 NO Alu/St	1241.3336.075
16	Flexible wire	Aluminum ,no	black	F	non-illuminated	PSE M 16 NO Alu/St	1241.3429
16	Flexible wire	Aluminum ,no	titan	F	non-illuminated	PSE M 16 NO Alu/St	1241.3460
16	Pins	Aluminum ,no	gold	F	non-illuminated	PSE M 16 NO Alu/St	1241.2411.1
16	Pins	Aluminum ,no	red	F	non-illuminated	PSE M 16 NO Alu/St	1241.2411.3
16	Pins	Aluminum ,no	blue	F	non-illuminated	PSE M 16 NO Alu/St	1241.2411.4
16	Pins	Aluminum ,no	green	F	non-illuminated	PSE M 16 NO Alu/St	1241.2411.5
16	Pins	Aluminum ,no	black	F	non-illuminated	PSE M 16 NO Alu/St	1241.2411.7
16	Pins	Aluminum ,no	Alu natural	F	non-illuminated	PSE M 16 NO Alu/St	1241.2411.8
16	Pins	Plastics ,no	red	F	non-illuminated	PSE M 16 NO Pl	1241.2350
16	Pins	Plastics ,no	white	F	non-illuminated	PSE M 16 NO Pl	1241.2351
16	Pins	Plastics ,no	Alu natural	F	non-illuminated	PSE M 16 NO Pl	1241.2352
16	Pins	Plastics ,no	black	F	non-illuminated	PSE M 16 NO Pl	1241.2353
16	Pins	Stainless Steel ,no	-	F	non-illuminated	PSE M 16 NO Alu/St	1241.2611

Mounting Diameter	Terminal	Housing Material, Torsion Protection	Colour of Housing	Actuator area	Illumination, LED	Config. Code	Order Number

Legend:
Type: PSE
NO = normaly open
IV = prolonged signal
RU = PI = Point Illumination
RI = Ring Illumination
LE = Lettered
K = Plastics
Alu = Aluminium
ES = Stainless steel
F = Finger guidance
E = without finger guidance

Nut with gasket are enclosed in the box.

Other mounting diameters, materials, colors, connections, supply voltages possible available on request.
Special materials e.g. Marine grade stainless steel for use in salt and chlorinated environment on request.

Most Popular.

Availability for all products can be searched real-time:http://www.schurter.com/Stock-Check/Stock-Check-SCHURTER

Packaging unit 10 in box with insert or packed in air cushion bags





- Actuating elements in ESD safe packaging
- Screw nuts and sealing rings in a bag (enclosd in the box)

Accessories

	Description
	Connecting Terminal PSE Connecting Terminal

27.01.2017

The specifications, descriptions and illustrations indicated in this document are based on current information. All content is subject to modifications and amendments. Information furnished is believed to be accurate and reliable. However, users should independently evaluate the suitability and test each product selected for their own applications.