STFW3N150, STH3N150-2, STP3N150, STW3N150

N-channel 1500 V, 2.5 A, 6 Ω typ., PowerMESH™ Power MOSFETs in TO-3PF, H²PAK-2, TO-220 and TO247 packages

Datasheet - production data

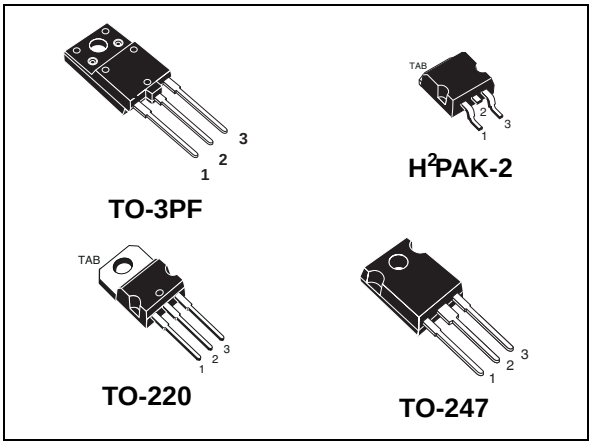

Figure 1. Internal schematic diagram

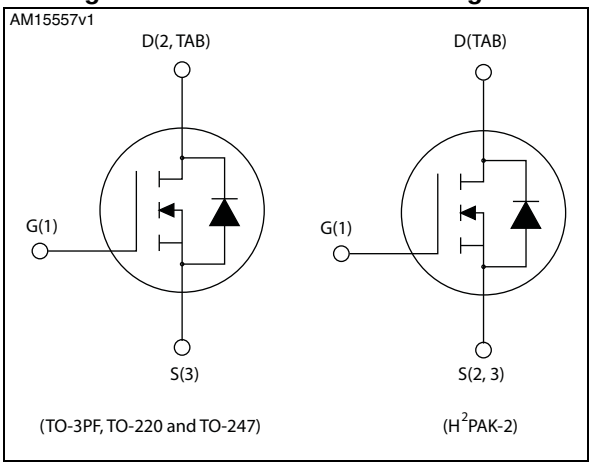

Features

Order codes	V_{DS}	$R_{DS(on)}$ max.	I_D	P_{TOT}
STFW3N150	1500 V	9 Ω	2.5 A	63 W
STH3N150-2				140 W
STP3N150				
STW3N150				

- 100% avalanche tested
- Intrinsic capacitances and Qg minimized
- High speed switching
- Fully isolated TO-3PF plastic package, creepage distance path is 5.4 mm (typ.)

Applications

- Switching applications

Description

These Power MOSFETs are designed using the company's consolidated strip layout-based MESH OVERLAY™ process. The result is a product that matches or improves on the performance of comparable standard parts from other manufacturers.

Table 1. Device summary

Order codes	Marking	Packages	Packaging
STFW3N150	3N150	TO-3PF	Tube
STH3N150-2		H²PAK-2	Tape and reel
STP3N150		TO-220	Tube
STW3N150		TO-247	

This is information on a product in full production. www.st.com

Contents

1 Electrical ratings 3

2 Electrical characteristics 4

2.1 Electrical characteristics (curves) 6

3 Test circuits 9

4 Package mechanical data 10

5 Packaging mechanical data 20

6 Revision history 22

1 Electrical ratings

Table 2. Absolute maximum ratings

Symbol	Parameter	Value		Unit
		TO-3PF	H^2PAK-2, TO-220, TO-247	
V_{DS}	Drain-source voltage	1500		V
V_{GS}	Gate-source voltage	± 30		V
I_D	Drain current (continuous) at T_C = 25 °C	2.5(1)	2.5	A
I_D	Drain current (continuous) at T_C = 100 °C	1.6(1)	1.6	A
I_{DM} (1)	Drain current (pulsed)	10(1)	10	A
P_{TOT}	Total dissipation at T_C = 25 °C	63	140	W
V_{ISO}	Insulation withstand voltage (RMS) from all three leads to external heat sink (t=1 s; T_C=25 °C)	3500		V
	Derating factor	0.5	1.12	W/°C
T_{stg}	Storage temperature	-50 to 150		°C
T_j	Max. operating junction temperature	150		°C

1. Pulse width limited by safe operating area

Table 3. Thermal data

Symbol	Parameter	TO-3PF	H^2PAK-2	TO-220	TO-247	Unit
$R_{thj\text{-}case}$	Thermal resistance junction-case max	2	0.89			°C/W
$R_{thj\text{-}amb}$	Thermal resistance junction-ambient max	50		62.5	50	°C/W
$R_{thj\text{-}pcb}$	Thermal resistance junction-pcb max		35(1)			°C/W

1. When mounted on 1 inch^2 FR-4 board, 2 oz Cu

Table 4. Avalanche characteristics

Symbol	Parameter	Max value	Unit
I_{AR}	Avalanche current, repetitive or not-repetitive (pulse width limited by T_j max)	2.5	A
E_{AS}	Single pulse avalanche energy (starting T_j = 25 °C, I_D = I_{AR}, V_{DD} = 50 V)	450	mJ

2 Electrical characteristics

(T_{case} = 25 °C unless otherwise specified)

Table 5. On /off states

Symbol	Parameter	Test conditions	Min.	Typ.	Max.	Unit
$V_{(BR)DSS}$	Drain-source breakdown voltage	I_D = 1 mA, V_{GS} = 0	1500			V
I_{DSS}	Zero gate voltage drain current (V_{GS} = 0)	V_{DS} = 1500 V			10	µA
		V_{DS} = 1500 V, T_C=125 °C			500	µA
I_{GSS}	Gate-body leakage current (V_{DS} = 0)	V_{GS} = ± 30 V			± 100	nA
$V_{GS(th)}$	Gate threshold voltage	V_{DS} = V_{GS}, I_D = 250 µA	3	4	5	V
$R_{DS(on}$	Static drain-source on-resistance	V_{GS} = 10 V, I_D = 1.3 A		6	9	Ω

Table 6. Dynamic

Symbol	Parameter	Test conditions	Min.	Typ.	Max.	Unit
g_{fs} (1)	Forward transconductance	V_{DS} = 30 V, I_D = 1.3 A	-	2.6	-	S
C_{iss}	Input capacitance	V_{DS} = 25 V, f = 1 MHz, V_{GS} = 0	-	939	-	pF
			-		-	pF
			-		-	pF
C_{oss}	Output capacitance		-	102	-	pF
C_{rss}	Reverse transfer capacitance		-	13.2	-	pF
$C_{oss\ eq.}$ (2)	Equivalent output capacitance	V_{DS}=0 to 1200 V, V_{GS} = 0	-	100	-	pF
R_g	Gate input resistance	f = 1 MHz, gate DC Bias = 0, test signal level = 20 mV, I_D = 0	-	4	-	Ω
Q_g	Total gate charge	V_{DD} = 1200 V, I_D = 2.5 A, V_{GS} = 10 V *(Figure 19)*	-	29.3	-	nC
Q_{gs}	Gate-source charge		-	4.6	-	nC
Q_{gd}	Gate-drain charge		-	17	-	nC

1. Pulsed: pulse duration = 300 µs, duty cycle 1.5%
2. $C_{oss\ eq.}$ is defined as a constant equivalent capacitance giving the same charging time as C_{oss} when V_{DS} increases from 0 to 80% V_{DSS}

Table 7. Switching times

Symbol	Parameter	Test conditions	Min.	Typ.	Max.	Unit
$t_{d(on)}$	Turn-on delay time	V_{DD} = 750 V, I_D = 1.25 A, R_G = 4.7 Ω, V_{GS} = 10 V *(Figure 18)*	-	24	-	ns
t_r	Rise time		-	47	-	ns
$t_{d(off)}$	Turn-off-delay time		-	45	-	ns
t_f	Fall time		-	61	-	ns

Table 8. Source drain diode

Symbol	Parameter	Test conditions	Min.	Typ.	Max.	Unit
I_{SD}	Source-drain current		-		2.5	A
I_{SDM} (1)	Source-drain current (pulsed)		-		10	A
V_{SD} (2)	Forward on voltage	I_{SD} = 2.5 A, V_{GS} = 0	-		1.6	V
t_{rr}	Reverse recovery time	I_{SD} = 2.5 A, di/dt = 100 A/µs V_{DD}= 60 V *(Figure 20)*	-	410		ns
Q_{rr}	Reverse recovery charge		-	2.4		µC
I_{RRM}	Reverse recovery current		-	11.7		A
t_{rr}	Reverse recovery time	I_{SD} = 2.5 A, di/dt = 100 A/µs V_{DD}= 60 V, Tj = 150 °C *(Figure 20)*	-	540		ns
Q_{rr}	Reverse recovery charge		-	3.3		µC
I_{RRM}	Reverse recovery current		-	12.3		A

1. Pulse width limited by safe operating area
2. Pulsed: pulse duration = 300 µs, duty cycle 1.5%

2.1 Electrical characteristics (curves)

Figure 2. Safe operating area for TO-3PF

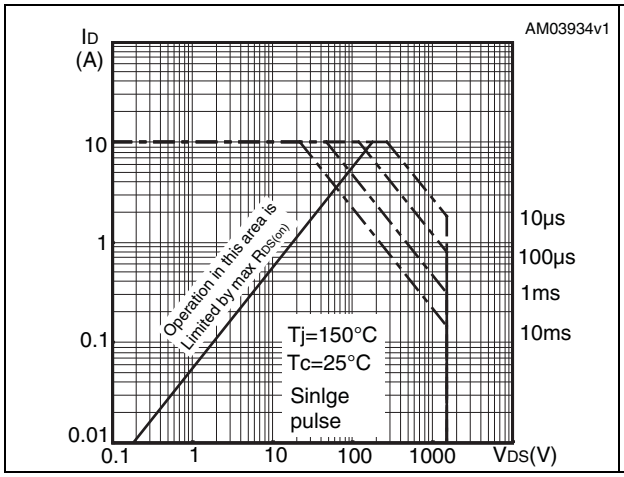

Figure 3. Thermal impedance for TO-3PF

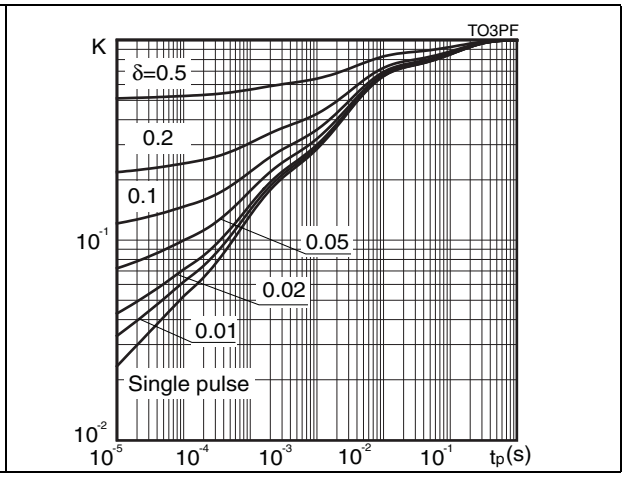

Figure 4. Safe operating area for H²PAK-2 and TO-220

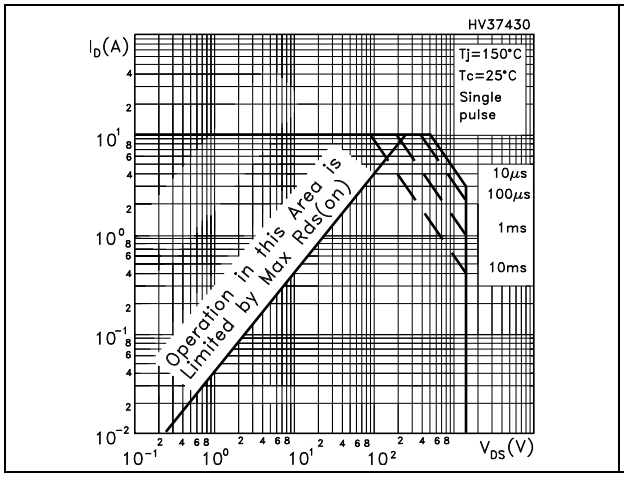

Figure 5. Thermal impedance for H²PAK-2 and TO-220

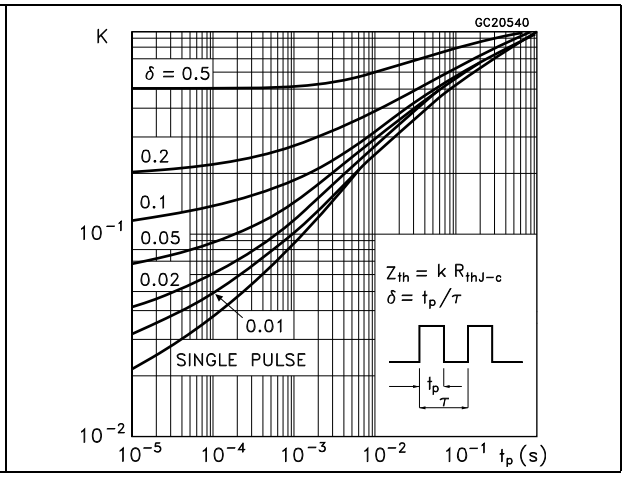

Figure 6. Safe operating area for TO-247

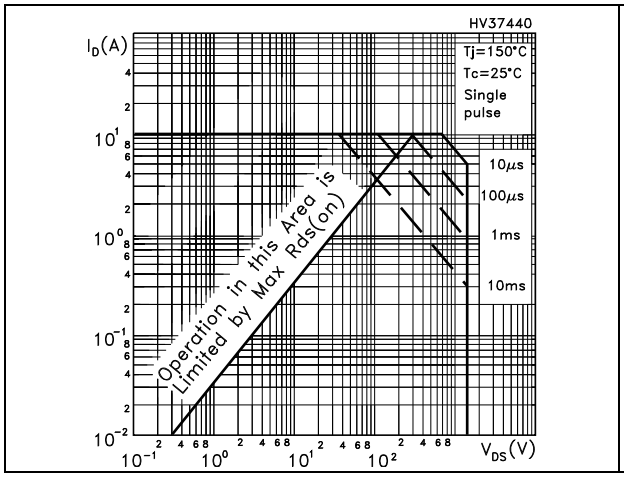

Figure 7. Thermal impedance for TO-247

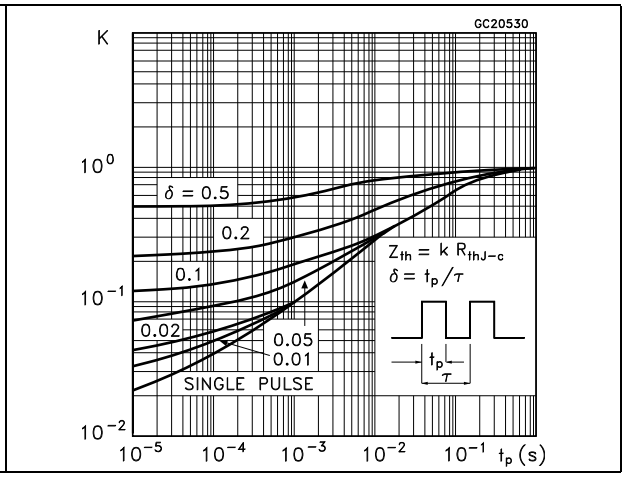

Figure 8. Output characteristics

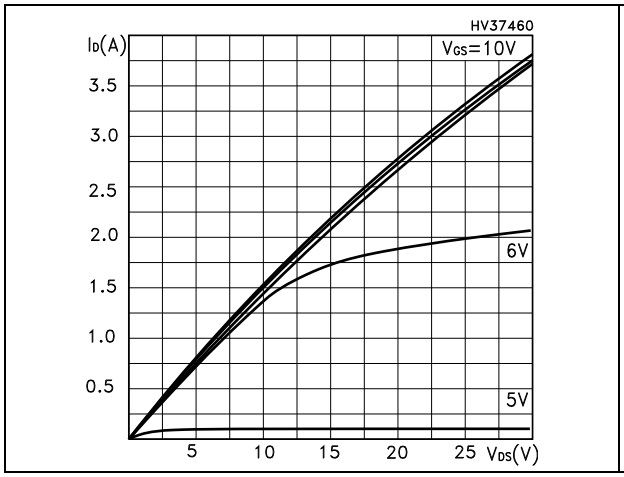

Figure 9. Transfer characteristics

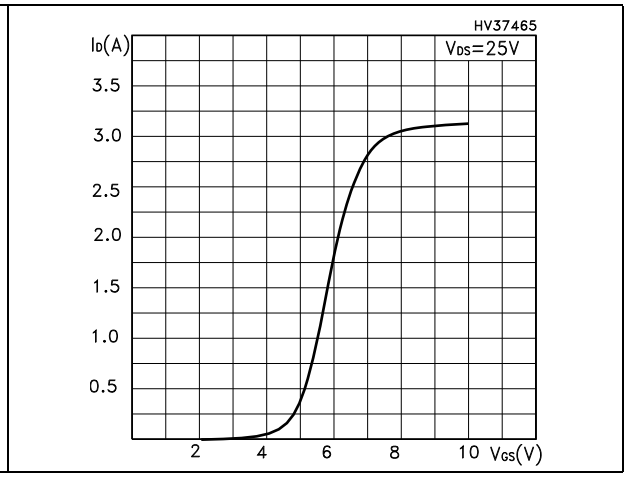

Figure 10. Normalized BV_{DSS} vs. temperature

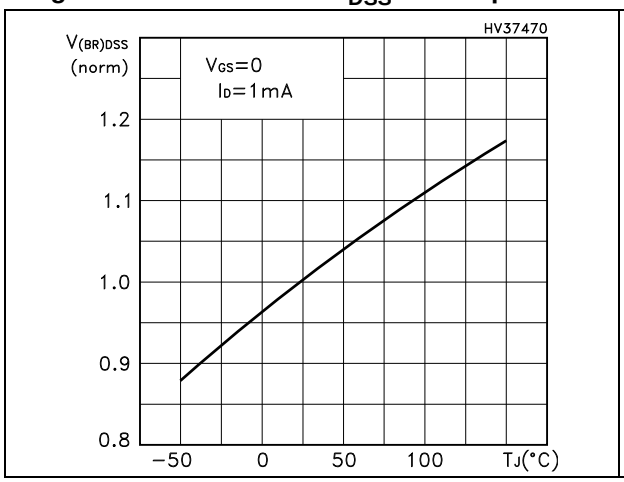

Figure 11. Static drain-source on-resistance

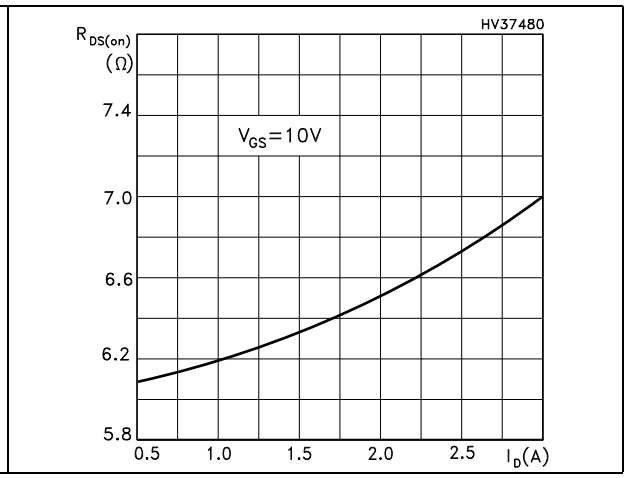

Figure 12. Gate charge vs. gate-source voltage

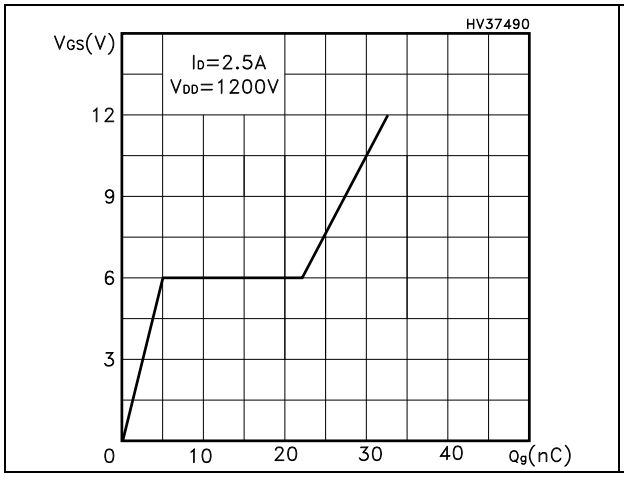

Figure 13. Capacitance variations

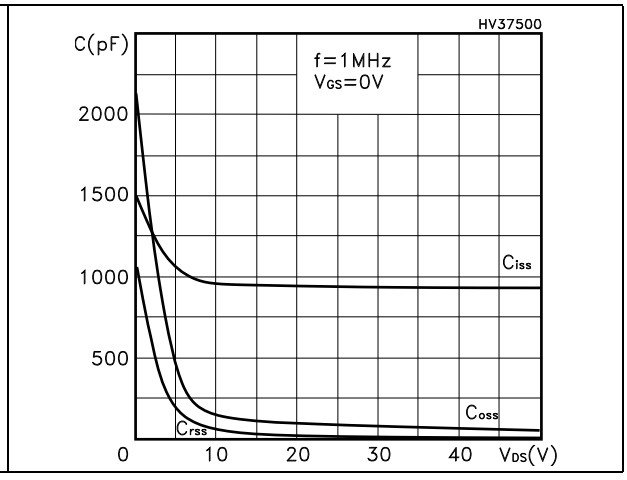

Figure 14. Normalized gate threshold voltage vs. temperature

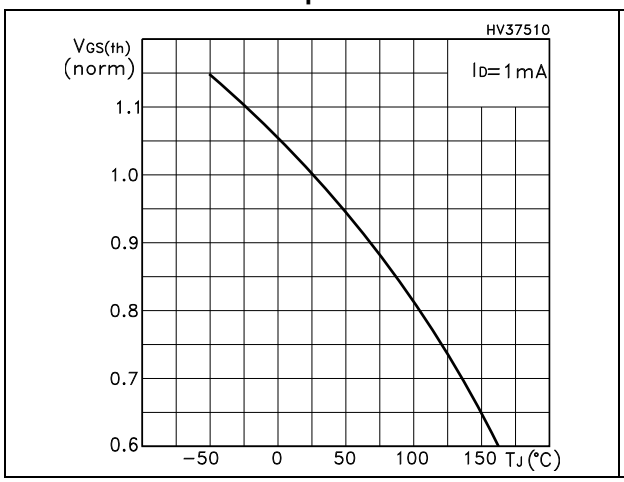

Figure 15. Normalized on resistance vs. temperature

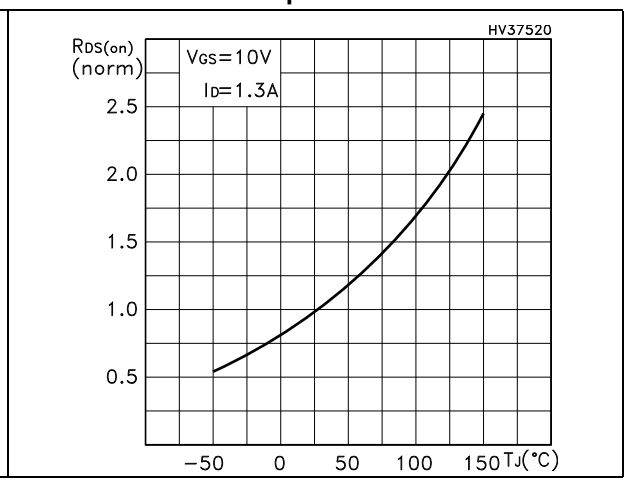

Figure 16. Source-drain diode forward characteristics

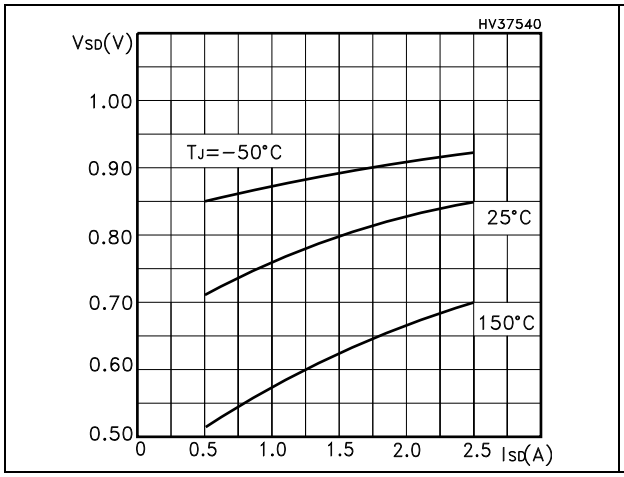

Figure 17. Maximum avalanche energy vs Tj

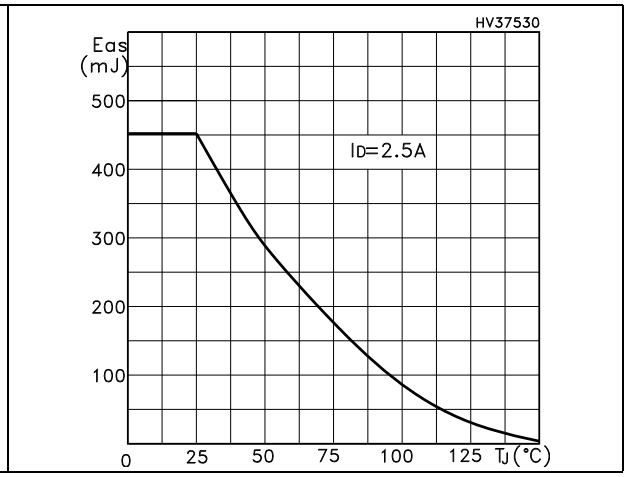

3 Test circuits

Figure 18. Switching times test circuit for resistive load

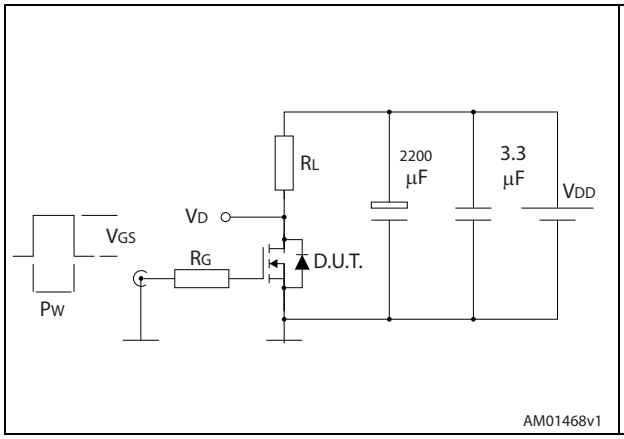

Figure 19. Gate charge test circuit

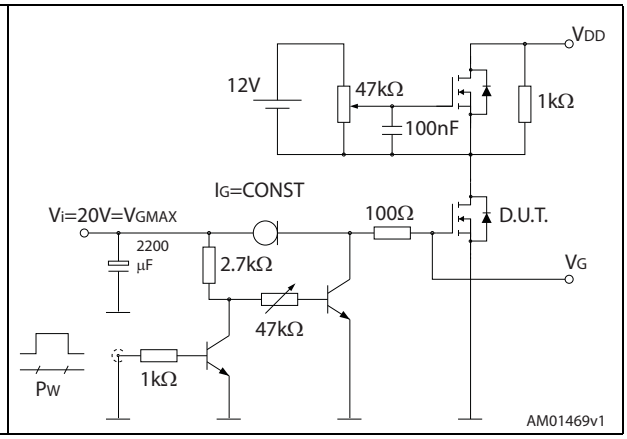

Figure 20. Test circuit for inductive load switching and diode recovery times

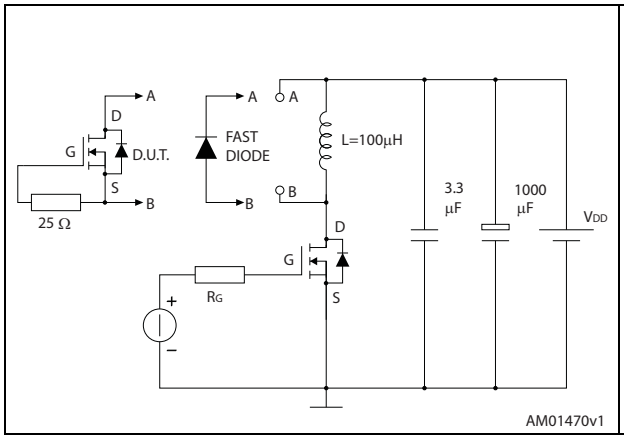

Figure 21. Unclamped inductive load test circuit

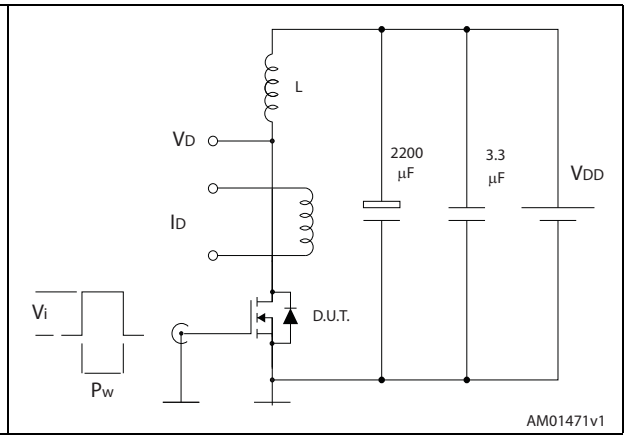

Figure 22. Unclamped inductive waveform

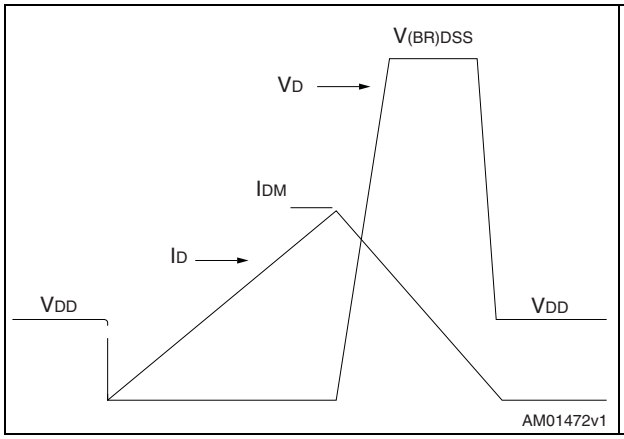

Figure 23. Switching time waveform

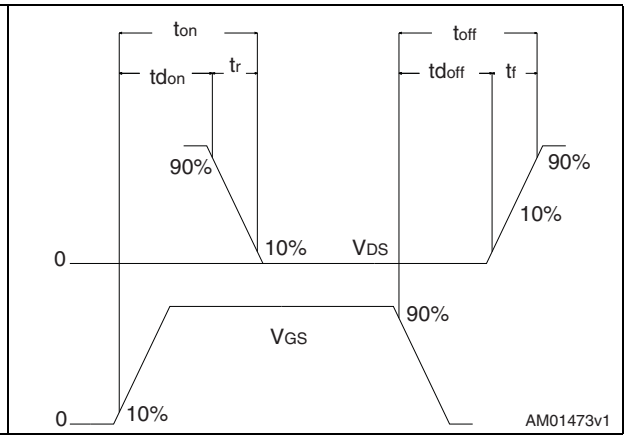

4 Package mechanical data

In order to meet environmental requirements, ST offers these devices in different grades of ECOPACK® packages, depending on their level of environmental compliance. ECOPACK® specifications, grade definitions and product status are available at: *www.st.com*.
ECOPACK® is an ST trademark.

Figure 24. TO-3PF drawing

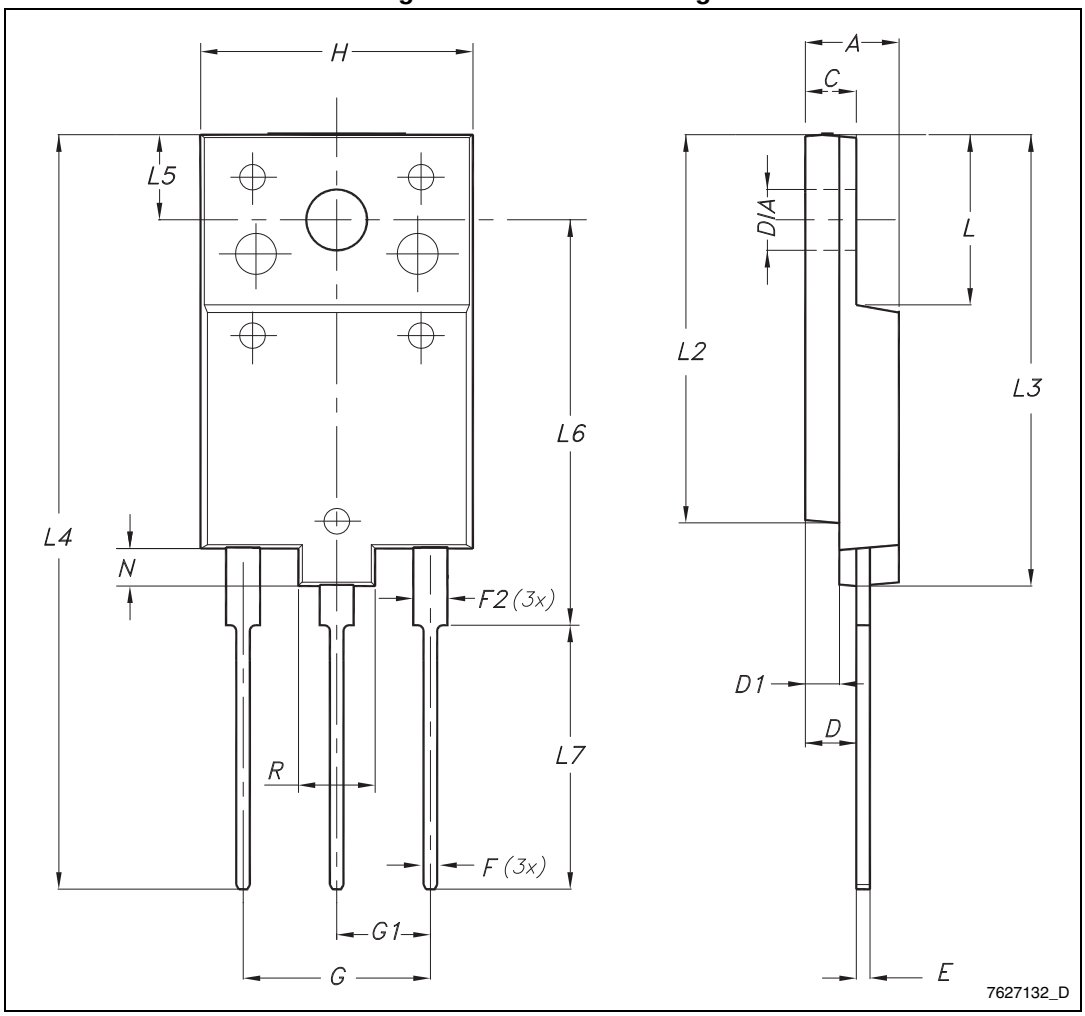

Table 9. TO-3PF mechanical data

Dim.	mm		
	Min.	Typ.	Max.
A	5.30		5.70
C	2.80		3.20
D	3.10		3.50
D1	1.80		2.20
E	0.80		1.10
F	0.65		0.95
F2	1.80		2.20
G	10.30		11.50
G1		5.45	
H	15.30		15.70
L	9.80	10	10.20
L2	22.80		23.20
L3	26.30		26.70
L4	43.20		44.40
L5	4.30		4.70
L6	24.30		24.70
L7	14.60		15
N	1.80		2.20
R	3.80		4.20
Dia	3.40		3.80

Figure 25. H²PAK-2 drawing

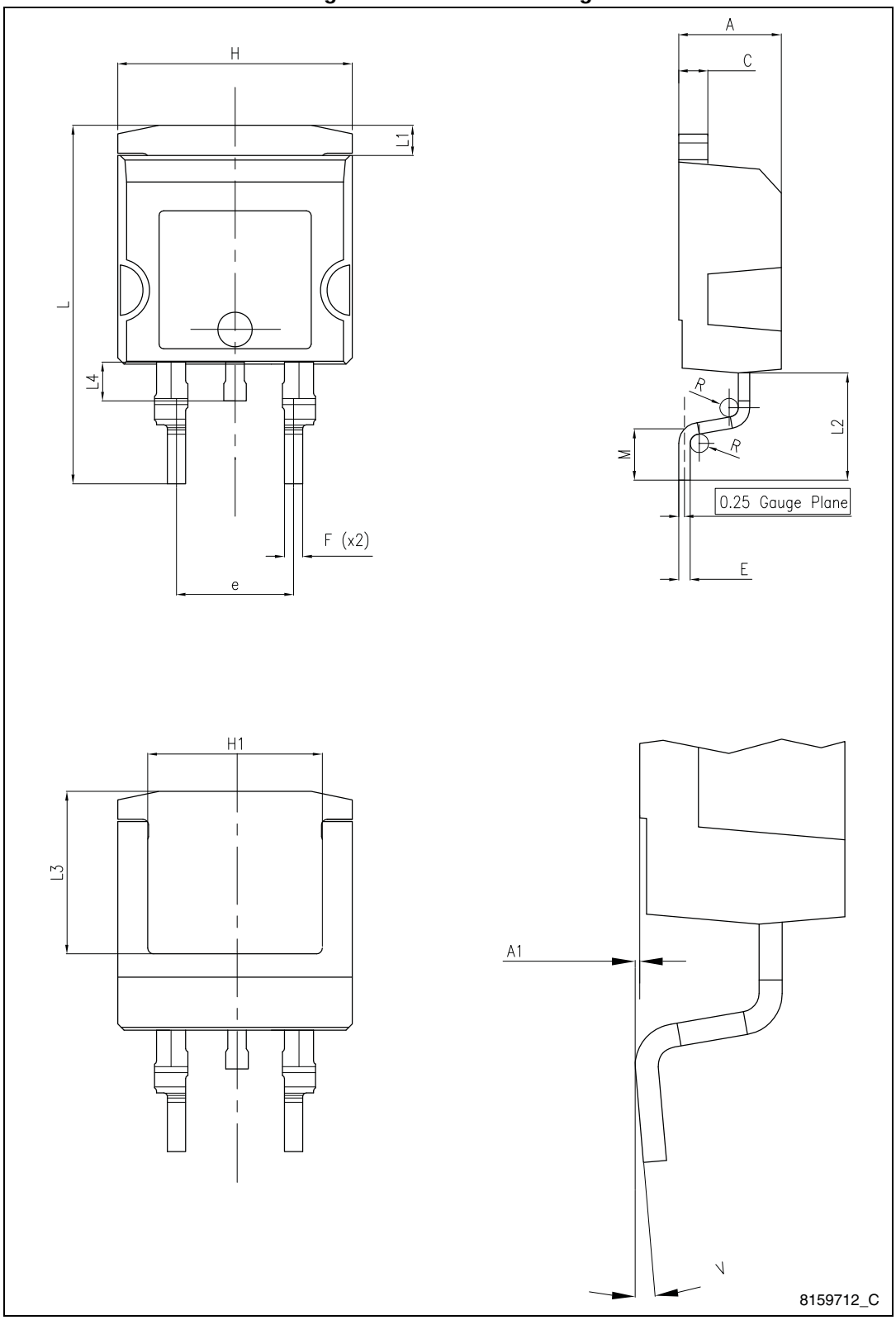

Table 10. H²PAK-2 mechanical data

Dim.	mm		
	Min.	Typ.	Max.
A	4.30	-	4.80
A1	0.03		0.20
C	1.17		1.37
e	4.98		5.18
E	0.50		0.90
F	0.78		0.85
H	10.00		10.40
H1	7.40		7.80
L	15.30		15.80
L1	1.27		1.40
L2	4.93		5.23
L3	6.85		7.25
L4	1.5		1.7
M	2.6		2.9
R	0.20		0.60
V	0°		8°

Figure 26. H²PAK-2 recommended footprint (dimensions are in mm)

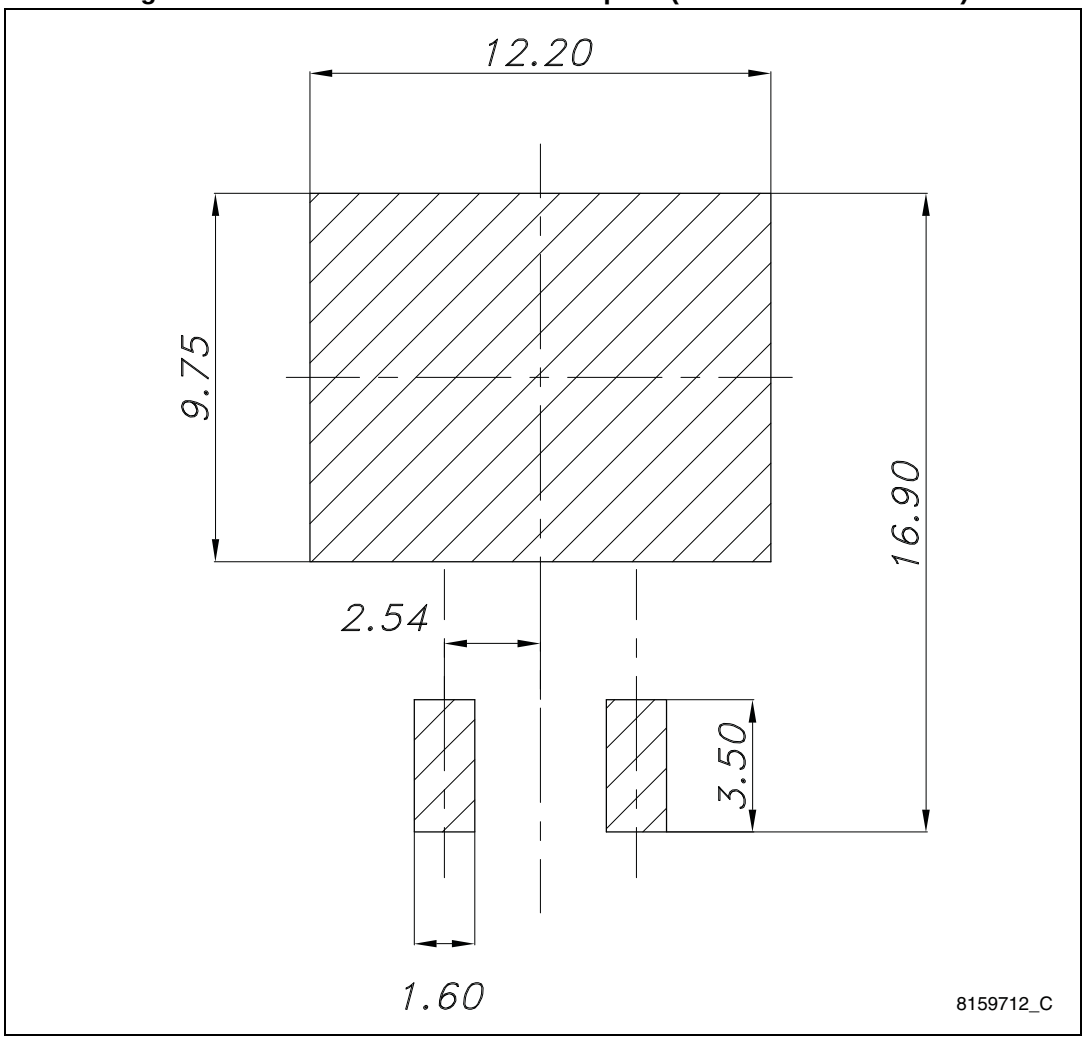

Figure 27. TO-220 type A drawing

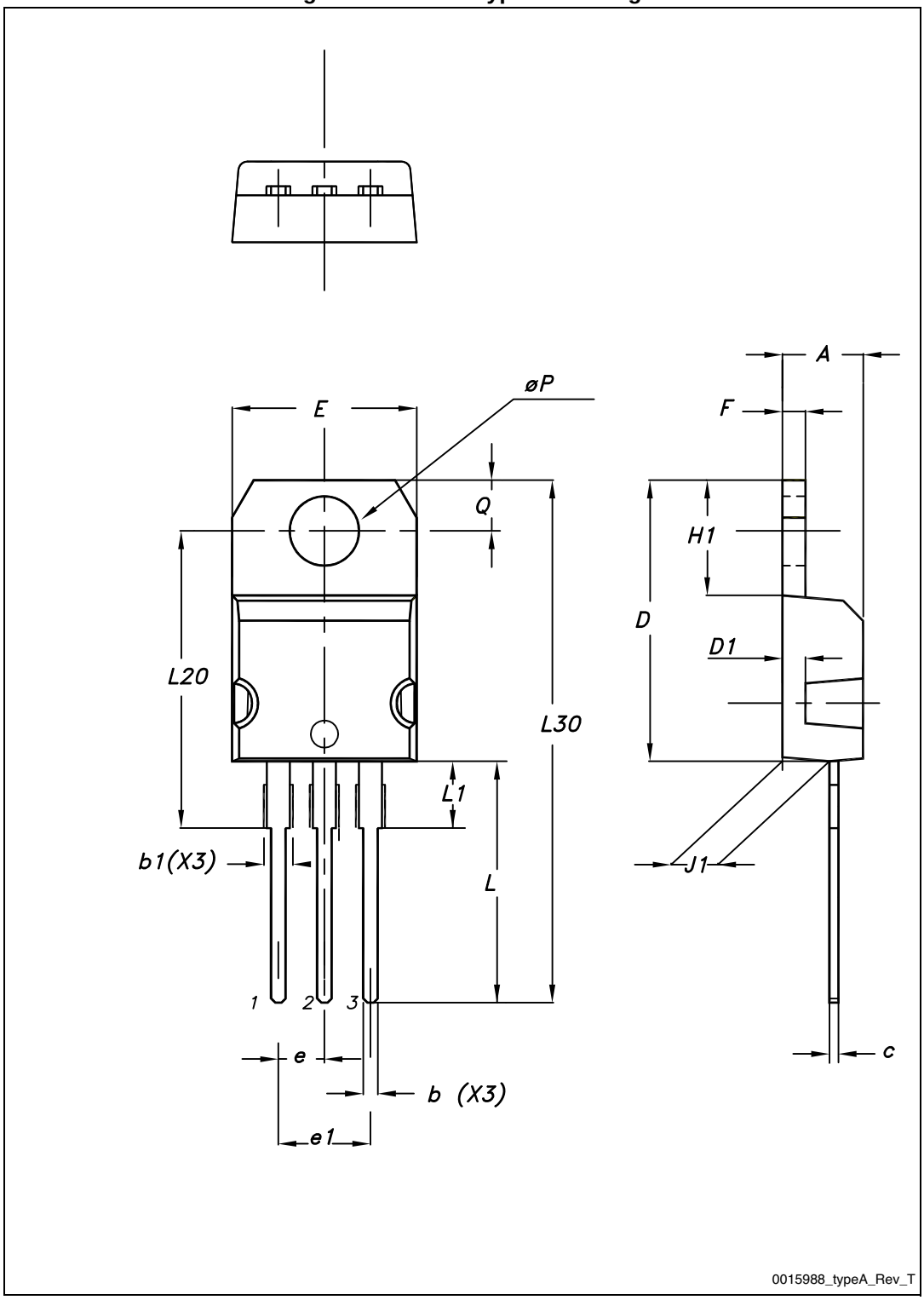

Table 11. TO-220 type A mechanical data

Dim.	mm		
	Min.	Typ.	Max.
A	4.40		4.60
b	0.61		0.88
b1	1.14		1.70
c	0.48		0.70
D	15.25		15.75
D1		1.27	
E	10		10.40
e	2.40		2.70
e1	4.95		5.15
F	1.23		1.32
H1	6.20		6.60
J1	2.40		2.72
L	13		14
L1	3.50		3.93
L20		16.40	
L30		28.90	
∅P	3.75		3.85
Q	2.65		2.95

Figure 28. TO-247 drawing

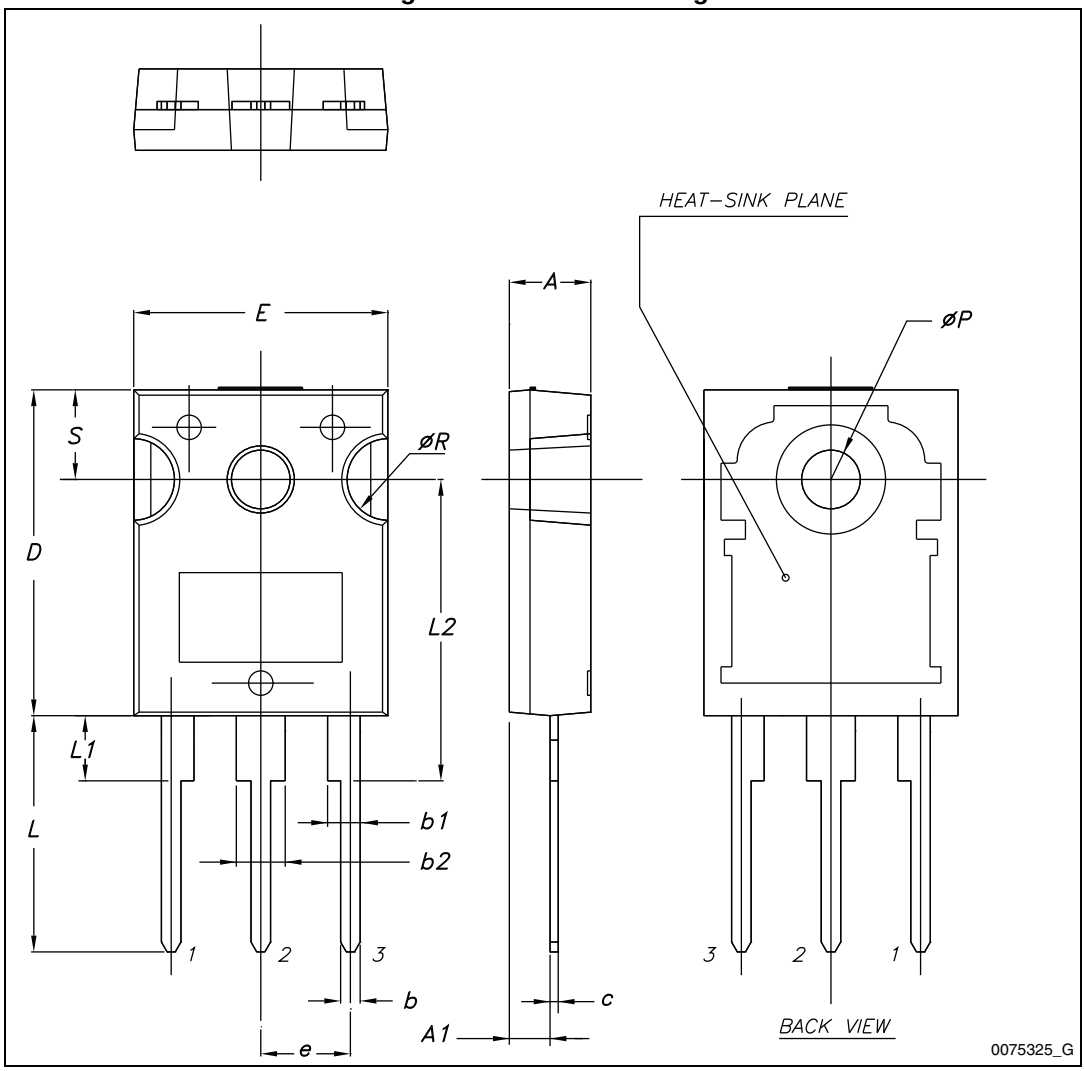

Table 12. TO-247 mechanical data

Dim.	mm.		
	Min.	Typ.	Max.
A	4.85		5.15
A1	2.20		2.60
b	1.0		1.40
b1	2.0		2.40
b2	3.0		3.40
c	0.40		0.80
D	19.85		20.15
E	15.45		15.75
e	5.30	5.45	5.60
L	14.20		14.80
L1	3.70		4.30
L2		18.50	
∅P	3.55		3.65
∅R	4.50		5.50
S	5.30	5.50	5.70

5 Packaging mechanical data

Figure 29. Tape

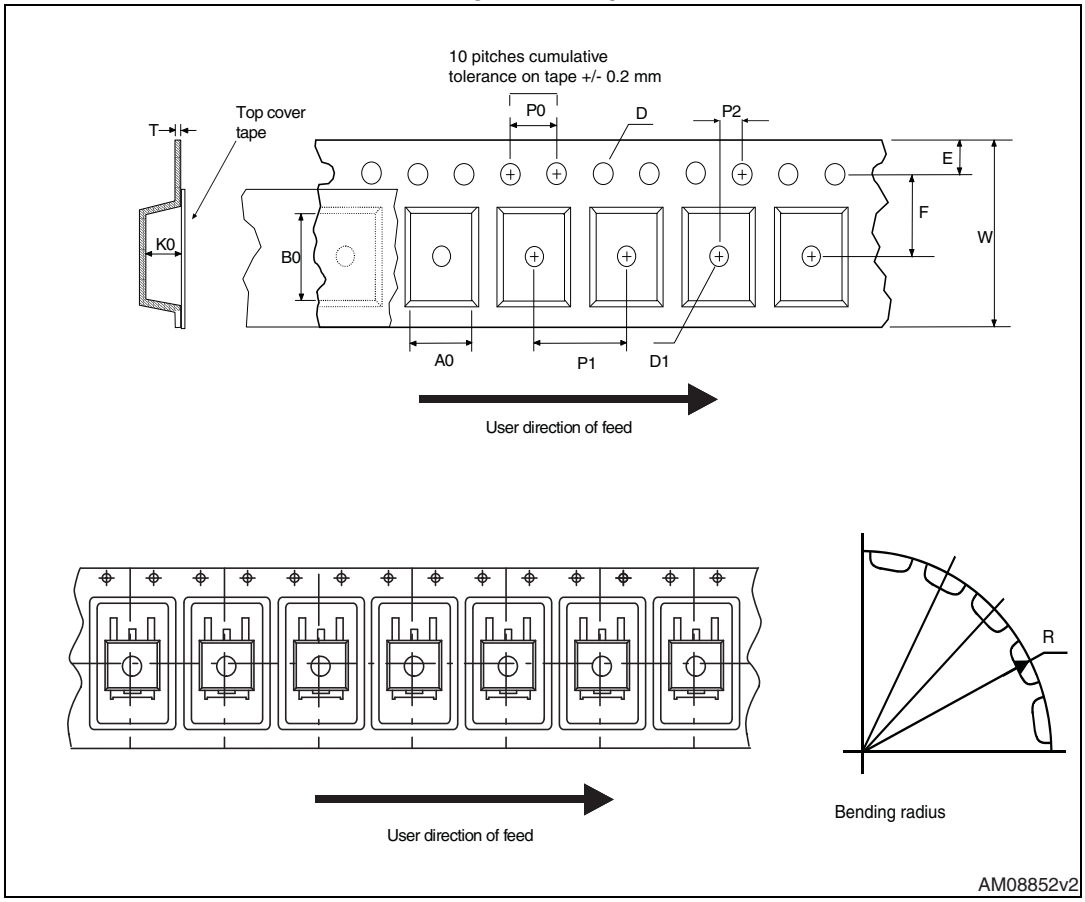

Figure 30. Reel

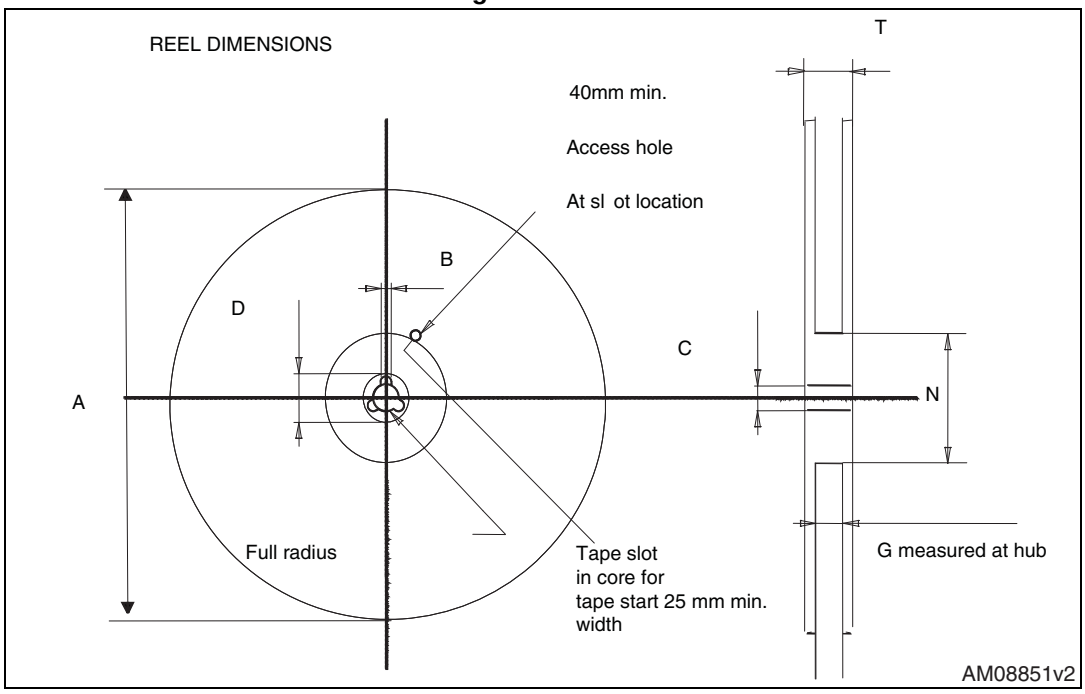

Table 13. H²PAK-2 tape and reel mechanical data

Tape			Reel		
Dim.	mm		Dim.	mm	
	Min.	Max.		Min.	Max.
A0	10.5	10.7	A		330
B0	15.7	15.9	B	1.5	
D	1.5	1.6	C	12.8	13.2
D1	1.59	1.61	D	20.2	
E	1.65	1.85	G	24.4	26.4
F	11.4	11.6	N	100	
K0	4.8	5.0	T		30.4
P0	3.9	4.1			
P1	11.9	12.1	Base qty		1000
P2	1.9	2.1	Bulk qty		1000
R	50				
T	0.25	0.35			
W	23.7	24.3			

6 Revision history

Table 14. Document revision history

Date	Revision	Changes
12-Jan-2007	1	First release
17-Apr-2007	2	Added new value on *Table 6.*
14-May-2007	3	The document has been reformatted
29-Aug-2007	4	$R_{DS(on)}$ value changed, updated *Figure 15*
09-Apr-2008	5	Added new package: TO-3PF
13-Feb-2009	6	Added P_{TOT} value for TO-3PF (*Table 2: Absolute maximum ratings*)
01-Dec-2009	7	– Document status promoted from preliminary data to datasheet – Removed TO-220FH package and mechanical data
10-Dec-2009	8	Corrected V_{ISO} value in *Table 2: Absolute maximum ratings*
29-Jun-2010	9	Corrected unit in *Table 3.*
08-Feb-2013	10	– Minor text changes – Modified: *Table 3* – Changed: *Figure 1* – Added: H^2PAK-2 package
18-Feb-2014	11	– Modified: *Figure 1* – Updated: *Figure 18*, *19*, *20* and *21* – Updated: *Figure 27* and *Table 11* – Updated: *Section 4: Package mechanical data* – Minor text changes

Please Read Carefully:

Information in this document is provided solely in connection with ST products. STMicroelectronics NV and its subsidiaries (“ST”) reserve the right to make changes, corrections, modifications or improvements, to this document, and the products and services described herein at any time, without notice.

All ST products are sold pursuant to ST’s terms and conditions of sale.

Purchasers are solely responsible for the choice, selection and use of the ST products and services described herein, and ST assumes no liability whatsoever relating to the choice, selection or use of the ST products and services described herein.

No license, express or implied, by estoppel or otherwise, to any intellectual property rights is granted under this document. If any part of this document refers to any third party products or services it shall not be deemed a license grant by ST for the use of such third party products or services, or any intellectual property contained therein or considered as a warranty covering the use in any manner whatsoever of such third party products or services or any intellectual property contained therein.

UNLESS OTHERWISE SET FORTH IN ST’S TERMS AND CONDITIONS OF SALE ST DISCLAIMS ANY EXPRESS OR IMPLIED WARRANTY WITH RESPECT TO THE USE AND/OR SALE OF ST PRODUCTS INCLUDING WITHOUT LIMITATION IMPLIED WARRANTIES OF MERCHANTABILITY, FITNESS FOR A PARTICULAR PURPOSE (AND THEIR EQUIVALENTS UNDER THE LAWS OF ANY JURISDICTION), OR INFRINGEMENT OF ANY PATENT, COPYRIGHT OR OTHER INTELLECTUAL PROPERTY RIGHT.

ST PRODUCTS ARE NOT DESIGNED OR AUTHORIZED FOR USE IN: (A) SAFETY CRITICAL APPLICATIONS SUCH AS LIFE SUPPORTING, ACTIVE IMPLANTED DEVICES OR SYSTEMS WITH PRODUCT FUNCTIONAL SAFETY REQUIREMENTS; (B) AERONAUTIC APPLICATIONS; (C) AUTOMOTIVE APPLICATIONS OR ENVIRONMENTS, AND/OR (D) AEROSPACE APPLICATIONS OR ENVIRONMENTS. WHERE ST PRODUCTS ARE NOT DESIGNED FOR SUCH USE, THE PURCHASER SHALL USE PRODUCTS AT PURCHASER’S SOLE RISK, EVEN IF ST HAS BEEN INFORMED IN WRITING OF SUCH USAGE, UNLESS A PRODUCT IS EXPRESSLY DESIGNATED BY ST AS BEING INTENDED FOR “AUTOMOTIVE, AUTOMOTIVE SAFETY OR MEDICAL” INDUSTRY DOMAINS ACCORDING TO ST PRODUCT DESIGN SPECIFICATIONS. PRODUCTS FORMALLY ESCC, QML OR JAN QUALIFIED ARE DEEMED SUITABLE FOR USE IN AEROSPACE BY THE CORRESPONDING GOVERNMENTAL AGENCY.

Resale of ST products with provisions different from the statements and/or technical features set forth in this document shall immediately void any warranty granted by ST for the ST product or service described herein and shall not create or extend in any manner whatsoever, any liability of ST.

ST and the ST logo are trademarks or registered trademarks of ST in various countries.
Information in this document supersedes and replaces all information previously supplied.
The ST logo is a registered trademark of STMicroelectronics. All other names are the property of their respective owners.

© 2014 STMicroelectronics - All rights reserved

STMicroelectronics group of companies

Australia - Belgium - Brazil - Canada - China - Czech Republic - Finland - France - Germany - Hong Kong - India - Israel - Italy - Japan - Malaysia - Malta - Morocco - Philippines - Singapore - Spain - Sweden - Switzerland - United Kingdom - United States of America

www.st.com