MC33172 MC35172

Low power dual bipolar operational amplifiers

Features

- Good consumption/speed ratio: only 200 µA for 2.1 MHz, 2 V/µs
- Single (or dual) supply operation from +4 V to +44 V (±2 V to ±22V)
- Wide input common mode mode voltage range including V_{CC}-
- Low level output voltage close to V_{CC}- : 100 mV typical
- Pin-to-pin compatible with standard dual operational amplifiers

Description

The MC3x172 series are dual bipolar operational amplifiers offering both low consumption (200 µA/Amp) and good speed (2.1 MHz, 2 V/µs).

Moreover, the input common mode range extends down to the lower supply rail, allowing single supply operation from +4 V to +44 V.

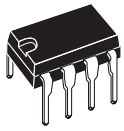

N
DIP8
(Plastic package)

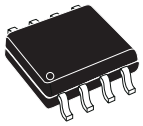

D
SO-8
(Plastic micropackage)

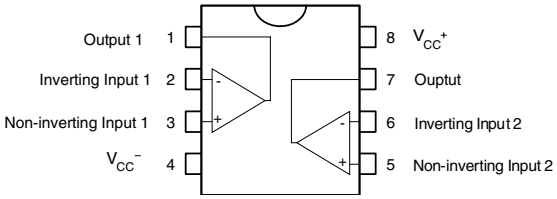

Pin connections
(top view)

1 Circuit schematics

Figure 1. Typical schematic diagram (1/2 MC33172/MC35172)

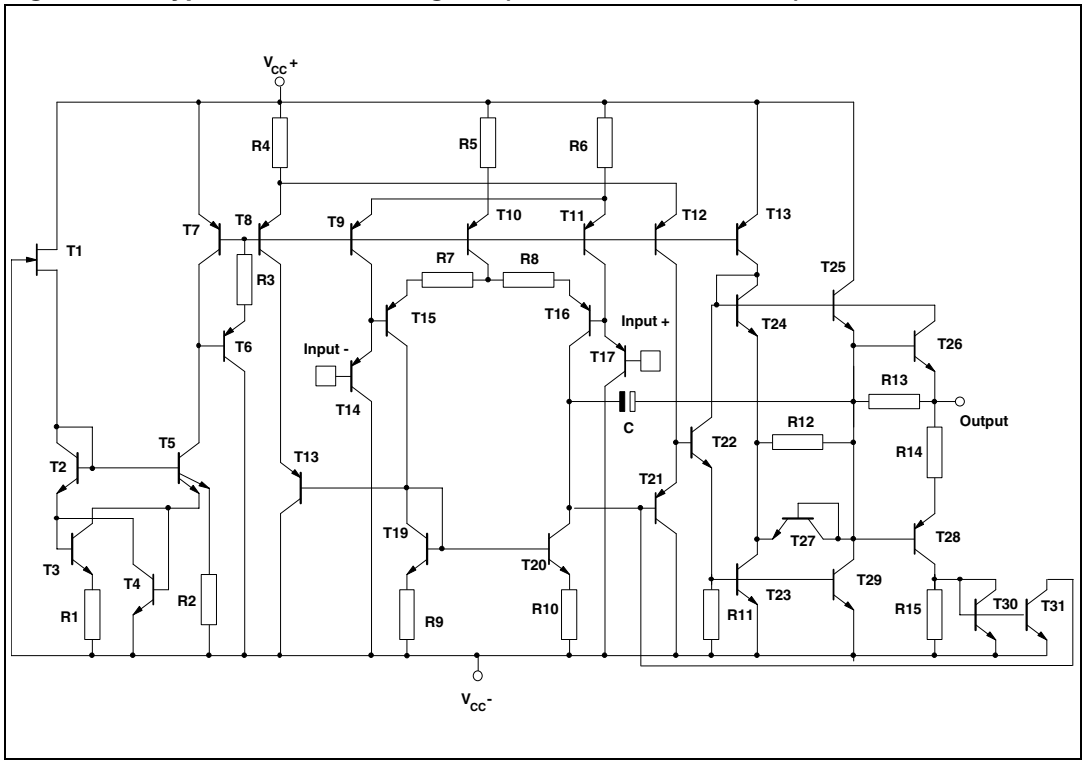

2 Absolute maximum ratings and operating conditions

Table 1. Absolute maximum ratings (AMR)

Symbol	Parameter	Value	Unit
V_{CC}	Supply voltage	±22	V
V_{id}	Differential input voltage	see note (1)	V
V_{in}	Input voltage	see note 1	V
	Output short-circuit duration	Indefinite	s
T_{oper}	Operating free-air temperature range MC33172 MC35172	 -40 to 105 -55 to 125	°C
R_{thja}	Thermal resistance junction to ambient(2) SO-8 DIP8	 125 85	°C/W
R_{thjc}	Thermal resistance junction to case(2) SO-8 DIP8	 40 41	°C/W
T_j	Junction temperature	150	°C
T_{stg}	Storage temperature	-65 to 150	°C
ESD	HBM: human body model(3)	2	kV
	MM: machine model(4)	200	V
	CDM: charged device model(5)	1	kV
	Latch-up immunity	Class A	

1. Either or both input voltages must not exceed the magnitude of V_{CC}.
2. Short-circuits can cause excessive heating and destructive dissipation. Values are typical.
3. Human body model: A 100 pF capacitor is charged to the specified voltage, then discharged through a 1.5 kΩ resistor between two pins of the device. This is done for all couples of connected pin combinations while the other pins are floating.
4. Machine model: A 200 pF capacitor is charged to the specified voltage, then discharged directly between two pins of the device with no external series resistor (internal resistor < 5 Ω). This is done for all couples of connected pin combinations while the other pins are floating.
5. Charged device model: all pins and the package are charged together to the specified voltage and then discharged directly to the ground through only one pin. This is done for all pins.

Table 2. Operating conditions

Symbol	Parameter	Value	Unit
V_{CC}	Supply voltage	±2 to ±22	V

3 Electrical characteristics

Table 3. V_{CC}^+ = +15V, V_{CC}^- = -15V, R_L connected to Ground, T_{amb} = 25°C (unless otherwise specified)

Symbol	Parameter	Min.	Typ.	Max.	Unit
V_{io}	Input offset voltage V_{CC}^+ = +15V, V_{CC}^- = -15V, V_{ic} = 0V V_{CC}^+ = 5V, V_{CC}^- = 0V, V_{ic} = 0V, V_o = 1.4V V_{CC}^+ = +15V, V_{CC}^- = -15V, V_{ic} = 0V, $T_{min} \le T_{amb} \le T_{max}$		 1 1	 4.5 5 6.5	mV
DV_{io}	Input offset voltage drift		10		µV/°C
I_{io}	Input offset current (V_{ic} = 0V) $T_{min} \le T_{amb} \le T_{max}$		5	20 40	nA
I_{ib}	Input bias current (V_{ic} = 0V) $T_{min} \le T_{amb} \le T_{max}$		20	100 200	nA
A_{vd}	Large signal voltage gain (R_L = 10kΩ, V_o = ±10V) $T_{min} \le T_{amb} \le T_{max}$	50 25	100		V/mV
V_{OH}	High level output voltage V_{CC}^+= 5V, V_{CC}^-= 0V, R_L = 10kΩ V_{CC}^+= +15V, V_{CC}^- = -15V, R_L= 10kΩ V_{CC}^+= +15V, V_{CC}^-= -15V, R_L= 10kΩ, $T_{min} \le T_{amb} \le T_{max}$	 3.5 13.6 13.3	 4.2 14.2		V
V_{OL}	Low level output voltage V_{CC}^+= 5V, V_{CC}^-= 0V, R_L= 10kΩ V_{CC}^+= +15V, V_{CC}^-= -15V, R_L= 10kΩ V_{CC}^+= +15V, V_{CC}^-= -15V, R_L= 10kΩ, $T_{min} \le T_{amb} \le T_{max}$		 0.1 -14	 0.15 -13.6 -13.3	V
I_{sc}	Output short-circuit current (V_{id} = ±1V, V_o = 0V) Source Sink	 3 15	 6 27		mA
V_{icm}	Input common mode voltage range $T_{min} \le T_{amb} \le T_{max}$	V_{CC}^- to V_{CC}^+ - 1.8) V_{CC}^- to (V_{CC}^+ - 2.2)			V
CMR	Common-mode rejection ratio (V_{ic} = $V_{icm-min}$)	80	100		dB
SVR	Supply voltage rejection ratio (V_{CC} = ±5 to ±15V)	80	100		dB
I_{CC}	Supply current V_{CC}^+ = 5V, V_{CC}^- = 0V, no load V_{CC}^+ = +15V, V_{CC}^- = -15V, no load V_{CC}^+ = +15V, V_{CC}^- = -15V no load, $T_{min} \le T_{amb} \le T_{max}$		 200 220	 250 250 300	µA
SR	Slew rate (V_{in} = ±10V, R_L = 10kΩ, C_L = 100pF)	1.6	2		V/µs
GBP	Gain bandwidth product R_L = 10kΩ, C_L = 100pF, F= 100kHz	1.4	2.1		MHz
ϕm	Phase margin (R_L = 10kΩ, C_L = 100pF)		45		Degrees
e_n	Equivalent input noise voltage (F = 1kHz)		29		$\frac{nV}{\sqrt{Hz}}$
THD	Total harmonic distortion		0.05		%
V_{O1}/V_{O2}	Channel separation		120		dB

4 Package information

In order to meet environmental requirements, STMicroelectronics offers these devices in ECOPACK® packages. These packages have a lead-free second level interconnect. The category of second level interconnect is marked on the package and on the inner box label, in compliance with JEDEC Standard JESD97. The maximum ratings related to soldering conditions are also marked on the inner box label. ECOPACK is an STMicroelectronics trademark. ECOPACK specifications are available at: www.st.com.

4.1 DIP8 package information

Figure 2. DIP8 package mechanical drawing

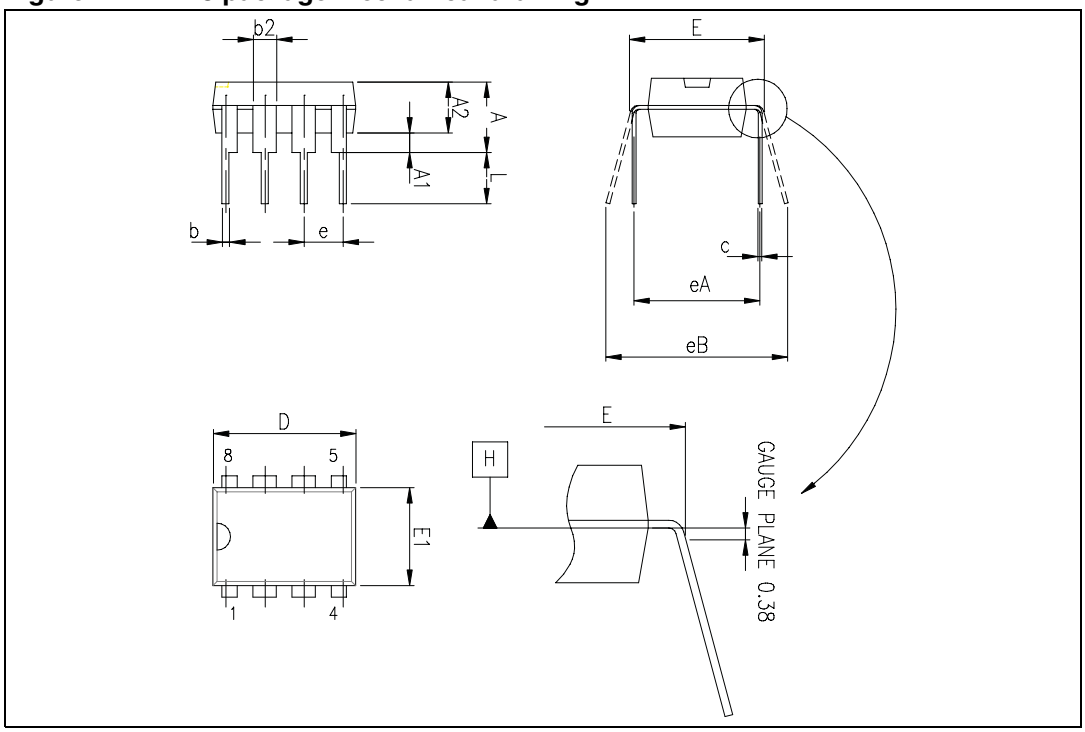

Table 4. DIP8 package mechanical data

Ref.	Dimensions					
	Millimeters			Inches		
	Min.	Typ.	Max.	Min.	Typ.	Max.
A			5.33			0.210
A1	0.38			0.015		
A2	2.92	3.30	4.95	0.115	0.130	0.195
b	0.36	0.46	0.56	0.014	0.018	0.022
b2	1.14	1.52	1.78	0.045	0.060	0.070
c	0.20	0.25	0.36	0.008	0.010	0.014
D	9.02	9.27	10.16	0.355	0.365	0.400
E	7.62	7.87	8.26	0.300	0.310	0.325
E1	6.10	6.35	7.11	0.240	0.250	0.280
e		2.54			0.100	
eA		7.62			0.300	
eB			10.92			0.430
L	2.92	3.30	3.81	0.115	0.130	0.150

4.2 SO-8 package information

Figure 3. SO-8 package mechanical drawing

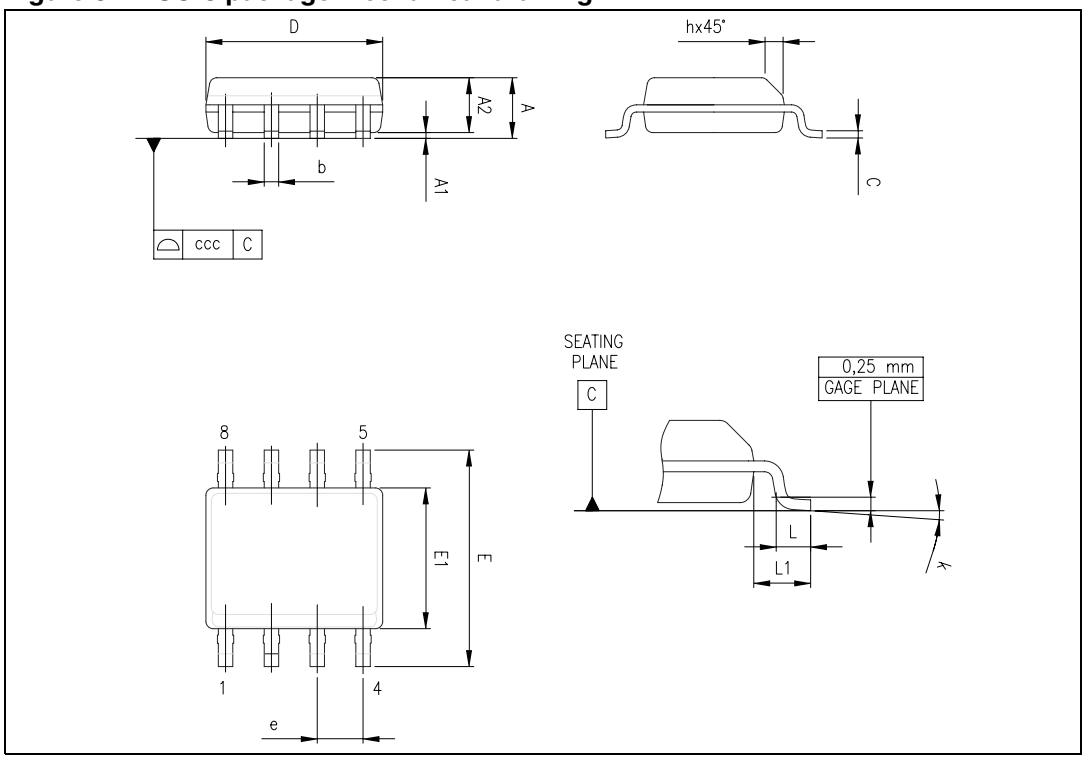

Table 5. SO-8 package mechanical data

Ref.	Dimensions					
	Millimeters			Inches		
	Min.	Typ.	Max.	Min.	Typ.	Max.
A			1.75			0.069
A1	0.10		0.25	0.004		0.010
A2	1.25			0.049		
b	0.28		0.48	0.011		0.019
c	0.17		0.23	0.007		0.010
D	4.80	4.90	5.00	0.189	0.193	0.197
E	5.80	6.00	6.20	0.228	0.236	0.244
E1	3.80	3.90	4.00	0.150	0.154	0.157
e		1.27			0.050	
h	0.25		0.50	0.010		0.020
L	0.40		1.27	0.016		0.050
k	1°		8°	1°		8°
ccc			0.10			0.004

5 Ordering information

Table 6. Order codes

Order code	Temperature range	Package	Packing	Marking
MC33172N	-40°C, +105°C	DIP8	Tape	MC33172N
MC33172D MC33172DT		SO-8	Tape or Tape & reel	33172
MC35172N	-55°C, +125°C	DIP8	Tape	MC35172N
MC35172D MC35172DT		SO-8	Tape or Tape & reel	35172

6 Revision history

Table 7. Document revision history

Date	Revision	Changes
24-Nov-2001	1	Initial release.
01-Jul-2008	2	ESD values and latch-up immunity added in *Table 1: Absolute maximum ratings (AMR)*.

Please Read Carefully:

Information in this document is provided solely in connection with ST products. STMicroelectronics NV and its subsidiaries (“ST”) reserve the right to make changes, corrections, modifications or improvements, to this document, and the products and services described herein at any time, without notice.

All ST products are sold pursuant to ST’s terms and conditions of sale.

Purchasers are solely responsible for the choice, selection and use of the ST products and services described herein, and ST assumes no liability whatsoever relating to the choice, selection or use of the ST products and services described herein.

No license, express or implied, by estoppel or otherwise, to any intellectual property rights is granted under this document. If any part of this document refers to any third party products or services it shall not be deemed a license grant by ST for the use of such third party products or services, or any intellectual property contained therein or considered as a warranty covering the use in any manner whatsoever of such third party products or services or any intellectual property contained therein.

UNLESS OTHERWISE SET FORTH IN ST’S TERMS AND CONDITIONS OF SALE ST DISCLAIMS ANY EXPRESS OR IMPLIED WARRANTY WITH RESPECT TO THE USE AND/OR SALE OF ST PRODUCTS INCLUDING WITHOUT LIMITATION IMPLIED WARRANTIES OF MERCHANTABILITY, FITNESS FOR A PARTICULAR PURPOSE (AND THEIR EQUIVALENTS UNDER THE LAWS OF ANY JURISDICTION), OR INFRINGEMENT OF ANY PATENT, COPYRIGHT OR OTHER INTELLECTUAL PROPERTY RIGHT.

UNLESS EXPRESSLY APPROVED IN WRITING BY AN AUTHORIZED ST REPRESENTATIVE, ST PRODUCTS ARE NOT RECOMMENDED, AUTHORIZED OR WARRANTED FOR USE IN MILITARY, AIR CRAFT, SPACE, LIFE SAVING, OR LIFE SUSTAINING APPLICATIONS, NOR IN PRODUCTS OR SYSTEMS WHERE FAILURE OR MALFUNCTION MAY RESULT IN PERSONAL INJURY, DEATH, OR SEVERE PROPERTY OR ENVIRONMENTAL DAMAGE. ST PRODUCTS WHICH ARE NOT SPECIFIED AS "AUTOMOTIVE GRADE" MAY ONLY BE USED IN AUTOMOTIVE APPLICATIONS AT USER’S OWN RISK.

Resale of ST products with provisions different from the statements and/or technical features set forth in this document shall immediately void any warranty granted by ST for the ST product or service described herein and shall not create or extend in any manner whatsoever, any liability of ST.

ST and the ST logo are trademarks or registered trademarks of ST in various countries.

Information in this document supersedes and replaces all information previously supplied.

The ST logo is a registered trademark of STMicroelectronics. All other names are the property of their respective owners.

© 2008 STMicroelectronics - All rights reserved

STMicroelectronics group of companies

Australia - Belgium - Brazil - Canada - China - Czech Republic - Finland - France - Germany - Hong Kong - India - Israel - Italy - Japan - Malaysia - Malta - Morocco - Singapore - Spain - Sweden - Switzerland - United Kingdom - United States of America

www.st.com