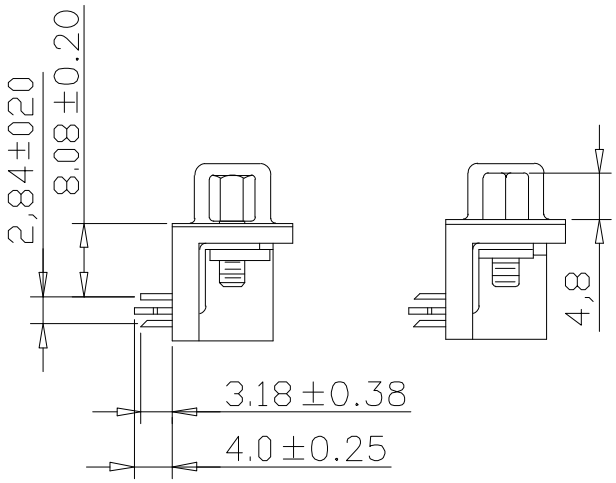

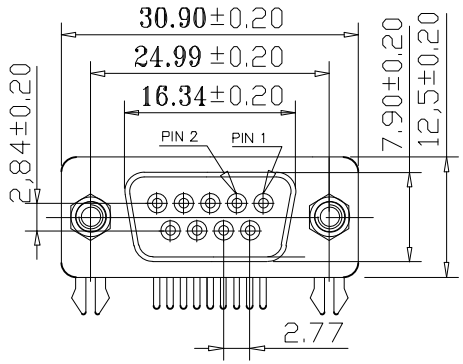

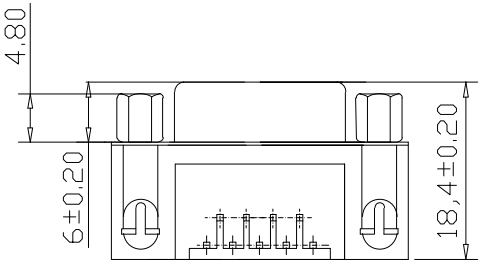

PARTS DIMENSION TABLE

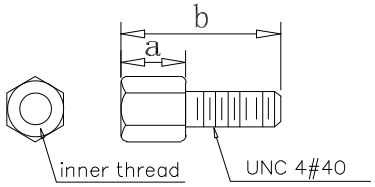

parts no.	DIM. a	DIM. b	inner thread
1	4.8	11.8	4#40

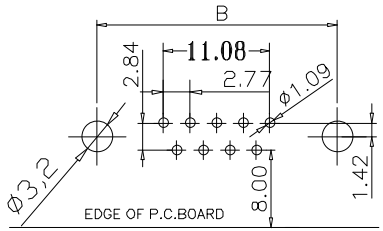

RECOMMENDED P.C.B LAYOUT (TOP VIEW)
TOLERANCES: ±0.05mm

MATERIALS AND FINISH
SHELL : STEEL MATERIAL, NICKEL FINISHED
INSULATOR : PBT THERMOPLASTIC, 30% GLASS FILLED, UL 94V−0 RATED, BLACK COLOR
CONTACT MATERIAL: BRASS
CONTACT FINISH : SELECTIVE GOLD FLASH
GROUNDING BRACKET : BRASS MATERIAL, TIN FINISHED

ELECTRICAL CHARACTERISTICS
CONTACT CURRENT RATING : 5.0 AMPS
CONTACT RESISTANCE : 30 MILLIOHMS MAX.
DIELECTRIC WITHSTANDING VOLTAGE : 1000 V AC MIN.
INSULATION RESISTANCE : 5000 MEGAOHMS MIN.
TEMPERATURE RATING : −55°C ~ +105°C

982−1 1− B 09 0 400R
1 2 3 4 5

1. 1: Right angle type
2. B: FT 7.2mm Female
3. No. of contacts
4. 0: Black insulator ; SELECTIVE
5. Pinrex internal code.

DCC
2025.06.26
Issuance Seal

REV.	DESCRIPTION	DATE
A	RELEASE	2025/06/06

TOLERANCE
.0 =±.25
.00 =±.20
.000 =±.15
.0000=±.
ANG.=±3°

UNITS : mm

SCALE	SIZE	SHEET	REV.
NONE	A4	1 OF 1	A

OLD PART NO.

DRAWER	CHECK	APP'D
QuHuanYin	Li Jian	Li Jian

TITLE: D−SUB R/A 09P Female

NEW PART NO.: 982−11−B091400R

PINREX TECHNOLOGY CORP.

DRAW NO.: 982−11−B091400R