HC-B 6-I-UT-M - Contact insert

1648115

https://www.phoenixcontact.com/sk/products/1648115

Please be informed that the data shown in this PDF document is generated from our online catalog. Please find the complete data in the user documentation. Our general terms of use for downloads are valid.

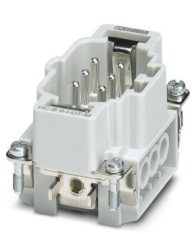

Contact insert, number of positions: 6+PE, size: B6, number of connections per position: 1, Pin, Screw connection, 500 V, 16 A, 0.5 mm^2 ... 2.5 mm^2, application: Power

Your advantages

- For fast coding with plastic profile
- For test pin 2 mm
- Shock and vibration-resistant in accordance with DIN EN 61373

Commercial data

Item number	1648115
Packing unit	1 pc
Minimum order quantity	1 pc
Sales key	AF7
Product key	AF7ABC
GTIN	4046356092234
Weight per piece (including packing)	48.2 g
Weight per piece (excluding packing)	47.8 g
Customs tariff number	85366990
Country of origin	CN

Technical data

Notes

General	for flexible conductors with or without ferrules
General	Connectors may be operated only when there is no load/voltage.

Mounting

Assembly note	To ensure correct use, installation in housing with IP54 protection or better is required

Product properties

Series	HC-B
Application	Power
Type	B6
Number of positions	6
Connection profile	6+PE
Contact numbering	1 - 6
Number of connections per position	1
Contact material type	turned
Screwdriver blade	0.5 x 3.5 mm

Insulation characteristics

Overvoltage category	III
Degree of pollution	3

Dimensions

Dimensional drawing	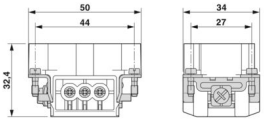
Width	34 mm
Height	32 mm
Length	50.5 mm
Drill hole distance, horizontal	44 mm
Drill hole distance, vertical	27 mm

Mechanical characteristics

Contact diameter	2.5 mm

Connection data

Connection technology

Connection technology	Screw connection
Number of connections per position	1
Connection in acc. with standard	IEC / EN

Conductor connection

Conductor cross-section	0.5 mm² ... 2.5 mm²
Connection cross section AWG	20 ... 14
Tightening torque	0.8 Nm ... 1.2 Nm (PE connection)
	0.5 Nm ... 0.8 Nm (Mounting screws for mounting in the HEAVYCON housing)
	0.5 Nm ... 0.8 Nm
Stripping length of the individual wire	8 mm

Electrical properties

Rated voltage (III/3)	500 V
Rated surge voltage	6 kV
Rated current	16 A
SCCR	5 kA (UL 2237)

Mechanical properties

Mechanical data

Insertion/withdrawal cycles	≥ 500

Material specifications

Flammability rating according to UL 94	V0
Contact material	Copper alloy
Contact surface material	Ag
Contact carrier material	PC
Standards/regulations	PC

Environmental and real-life conditions

Ambient conditions

Ambient temperature (operation)	-40 °C ... 125 °C (including heating up of contacts)

Standards and regulations

Constructional and testing regulations	DIN EN 61984
	DIN EN 60664
	IEC 60352
Tests	DIN EN 61984
	DIN EN 60664
	IEC 60352

Testing

Standards/regulations	PC: Fire protection in rail vehicles - requirement sets R22, R23, and R24 acc. to DIN EN 45545-2 (Risk level HL1 - HL3)

Drawings

Dimensional drawing

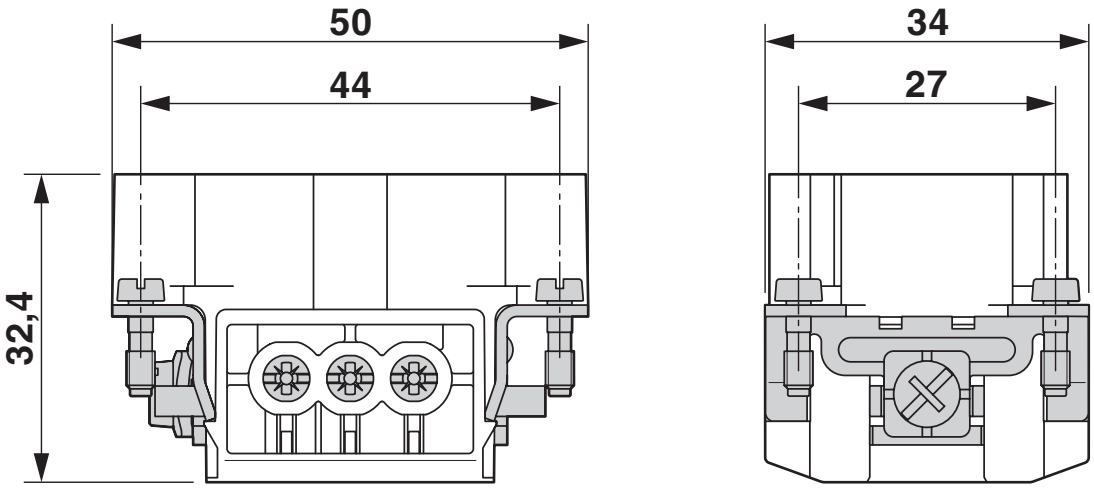

Male insert

Dimensional drawing

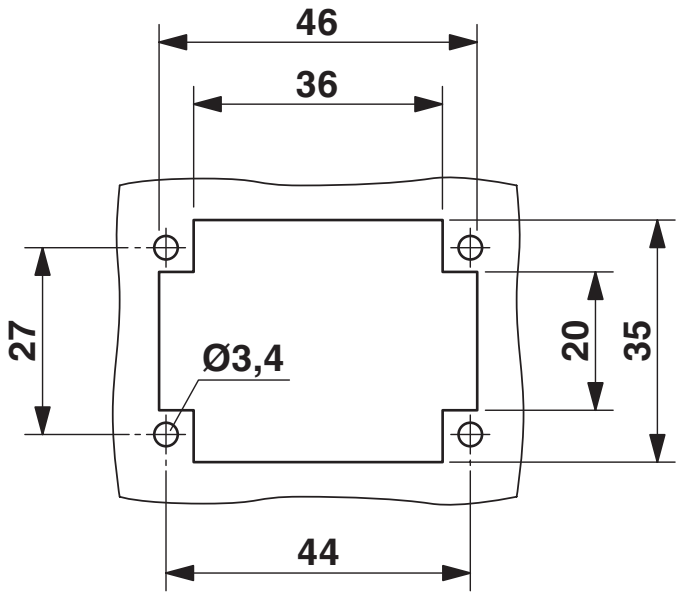

Mounting cutout when used without housing

Schematic diagram

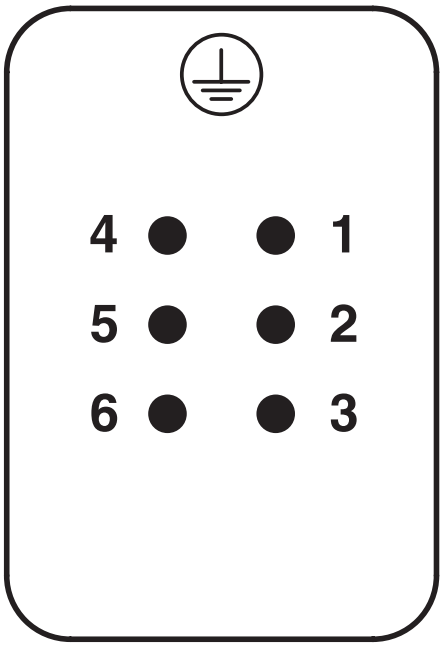

Connector pin assignment, connection side

Schematic diagram

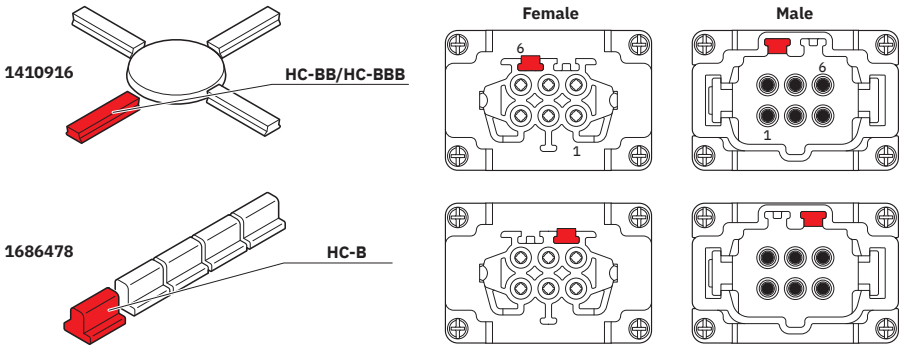

Coding options

Diagram

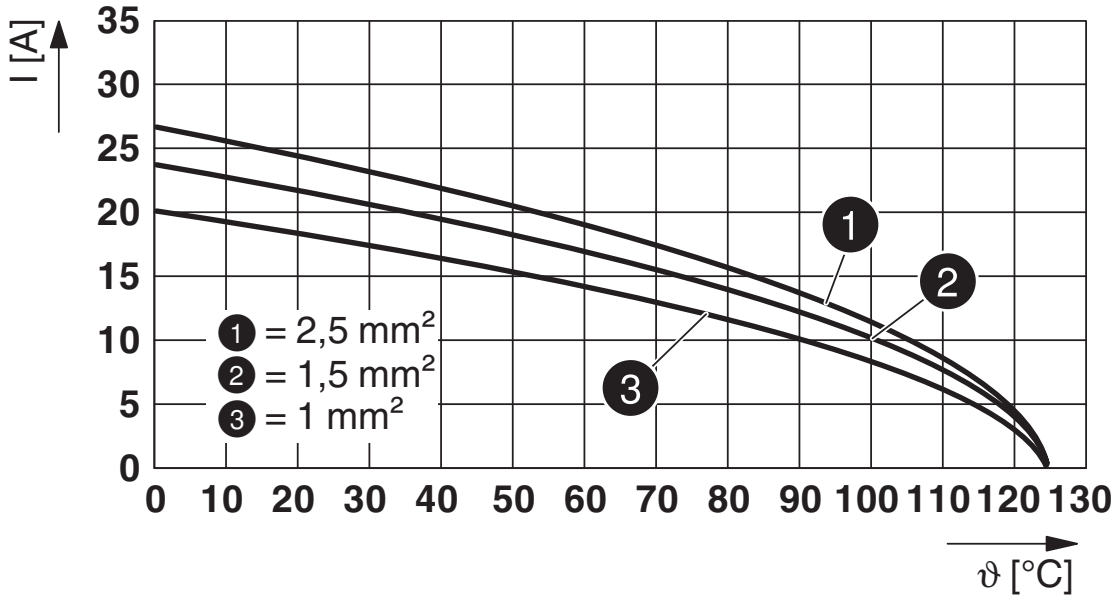

Derating diagram

Approvals

To download certificates, visit the product detail page: https://www.phoenixcontact.com/sk/products/1648115

DNV
Approval ID: TAE000037S

CSA
Approval ID: 013631_6233_01

	Nominal voltage U_N	Nominal current I_N	Cross section AWG	Cross section mm^2
keine				
	600 V	13 A	22 - 14	-

UL Recognized
Approval ID: E118976

	Nominal voltage U_N	Nominal current I_N	Cross section AWG	Cross section mm^2
keine				
	600 V	16 A	- 14	-

cULus Recognized
Approval ID: E468743

	Nominal voltage U_N	Nominal current I_N	Cross section AWG	Cross section mm^2
keine				
	600 V	14 A	- 14	-

Classifications

ECLASS

ECLASS-13.0	27440205
ECLASS-15.0	27440205

ETIM

ETIM 10.0	EC000438

UNSPSC

UNSPSC 21.0	39121500

Environmental product compliance

EU RoHS

Fulfills EU RoHS substance requirements	Yes
Exemption	6(c)

China RoHS

Environment friendly use period (EFUP)	EFUP-50
	An article-related China RoHS declaration table can be found in the download area for the respective article under "Manufacturer declaration". For all articles with EFUP-E, no China RoHS declaration table issued and required.

EU REACH SVHC

REACH candidate substance (CAS No.)	Lead(CAS: 7439-92-1)
SCIP	1b4a0565-0541-4b17-aad1-a9b20716217c

Phoenix Contact 2026 © - all rights reserved
https://www.phoenixcontact.com

PHOENIX CONTACT s.r.o.
Námestie Mateja Korvína 1
811 07 Bratislava
+421 2 3210 1470
obchod.sk@phoenixcontact.com