SAC-3P-MR/A-1L-Z SCO - Valve connectors

1458538

https://www.phoenixcontact.com/pc/products/1458538

Please be informed that the data shown in this PDF document is generated from our Online Catalog. Please find the complete data in the user documentation. Our General Terms of Use for Downloads are valid.



Valve connectors, 3-position, Plug angled M12, coding: A SPEEDCON, on Valve connector A, with 1 LED, connected with Z diode

Commercial Data

Item number	1458538
Packing unit	1 pc
Minimum order quantity	1 pc
Product Key	BF1GDA
Catalog Page	Page 256 (C-2-2019)
GTIN	4046356638982
Weight per Piece (including packing)	30.7 g
Weight per Piece (excluding packing)	30.7 g
Customs tariff number	85366990
Country of origin	PL

Technical Data

Mounting

Connection method	M12 connector

Product properties

Product type	Valve connector adapter
Number of positions	3
No. of cable outlets	1
Coding	A

Insulation characteristics

Overvoltage category	II
Degree of pollution	3

Dimensions

Dimensional drawing	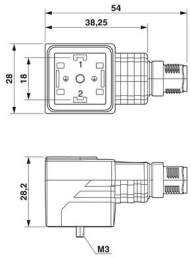
Width	28 mm
Height	28.2 mm
Length	54 mm

Connection data

Connection method	M12 connector
Tightening torque	0.6 Nm (valve plug)

Electrical properties

Contact resistance	≤ 5 mΩ
Insulation resistance	≥ 100 MΩ
Nominal voltage U_N	24 V AC
	24 V DC
Nominal current I_N	4 A
Protective circuit	Z diode

Valve connector characteristics

Fixing screws	M3 x 29
Pulse power	40 W (at 100 µs square-wave pulse)
Terminal voltage	70 V (at 2 mA constant current)

Reverse voltage	50 V

Mechanical properties

Mechanical data

Insertion/withdrawal cycles	50 (valve plug)
	≥ 100 (M12 connector)

Material specifications

Flammability rating according to UL 94	HB
Seal material	TPU
Material housing valve plug	TPU
Contact material	CuSn
Contact surface material	Ni/Au
Contact carrier material	PA 66
Contact material	CuSn
Valve plug contact insert material	PA 6.6
Contact surface material	Sn
Material for screw connection	Zinc die-cast, nickel-plated

Signaling

Status display	Yellow LED
Status display present	Yes

Connector

Connection 1

Type	Plug angled M12 SPEEDCON
Number of positions	3
Coding type	A
Number of positions	3
Locking type	SPEEDCON

Connection 2

Type	Valve connector A
Material	CuSn (Contact)
	Sn (Contact surface)
	PA 6.6 (Contact carriers)
	TPU (Housing)

Environmental and real-life conditions

Ambient conditions

Degree of protection	IP65
	IP67
Ambient temperature (operation)	-25 °C ... 85 °C (valve plug)

Standards and regulations

M12

Standards/specifications	IEC 61076-2-101

Valve connector

Standards/specifications	EN 175301-803

Drawings

Schematic diagram

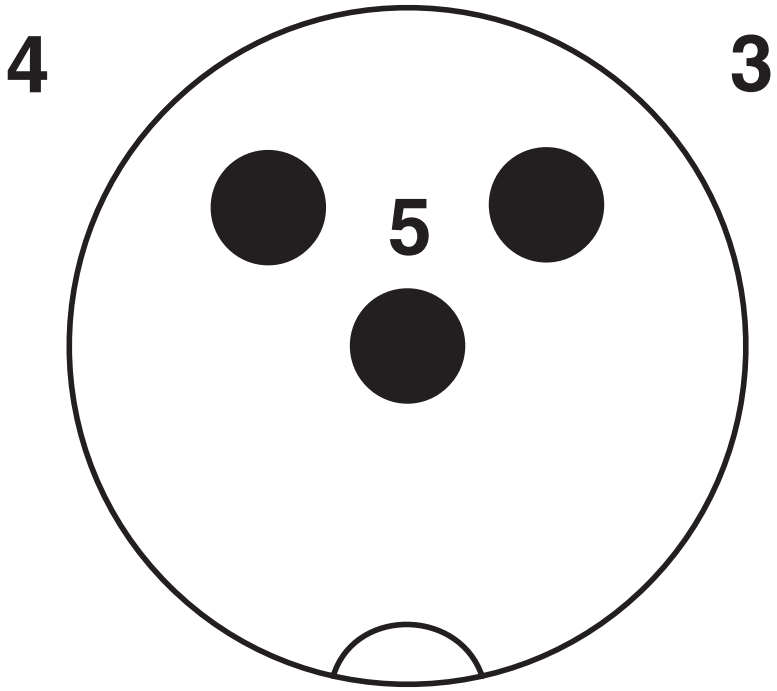

Pin assignment M12 plug, 3-pos., A-coded, view male side

Dimensional drawing

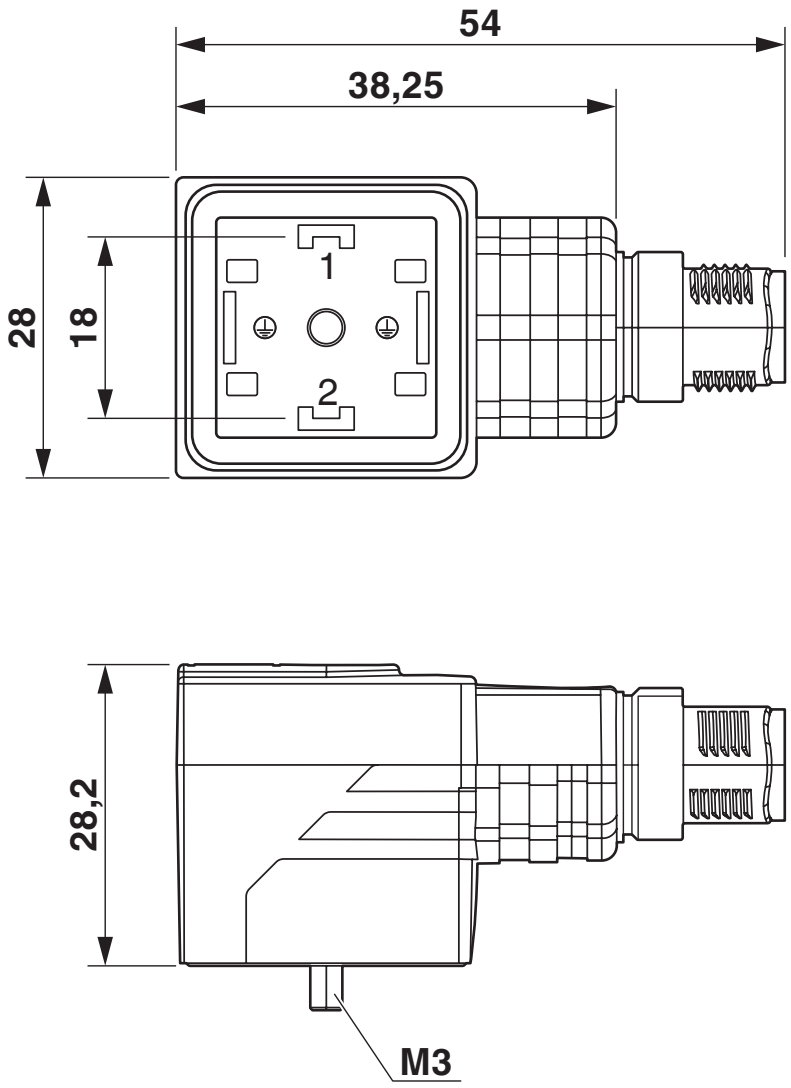

Circuit diagram

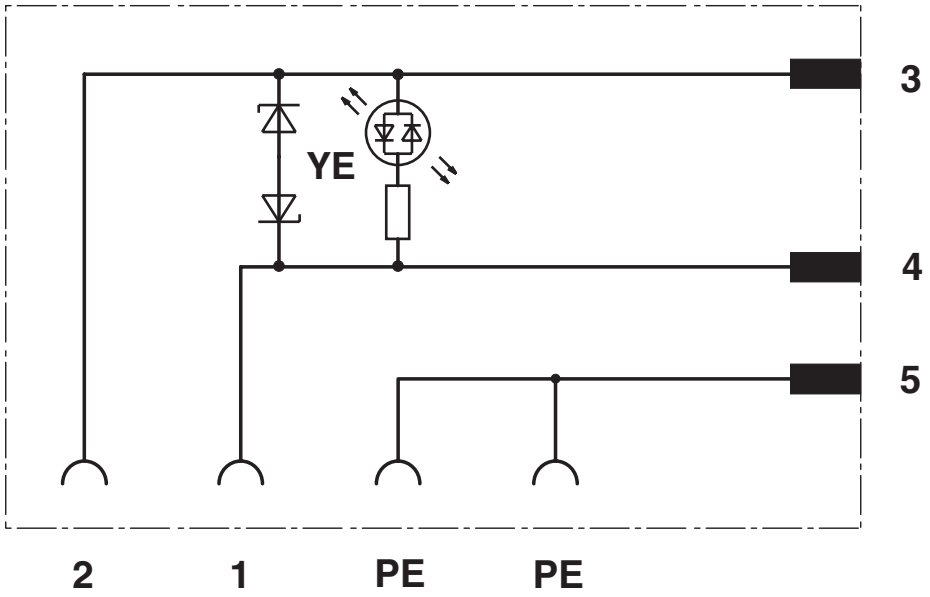

Schematic diagram

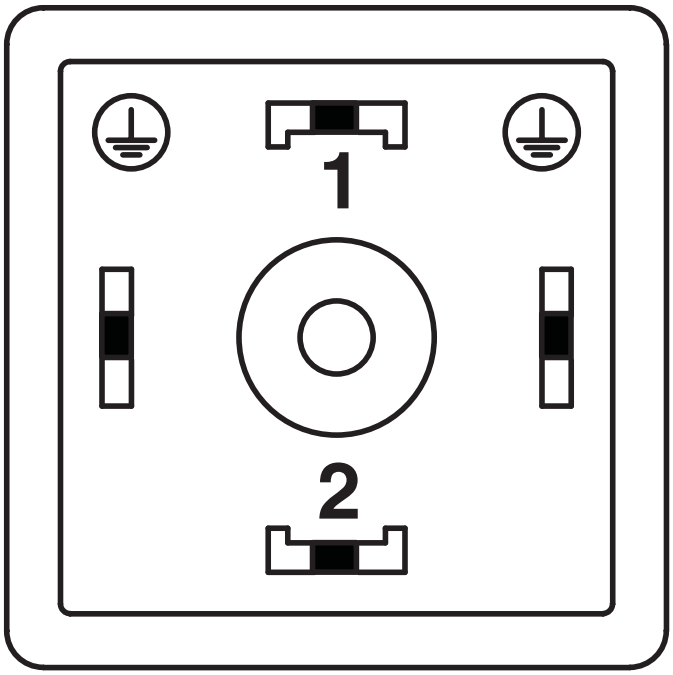

Valve connector pin assignment, type A

Approvals

To download certificates, visit the product detail page: https://www.phoenixcontact.com/pc/products/1458538

EAC
Approval ID: RU C-DE.AI30.B.01102

EAC
Approval ID: RU C-DE.BL08.B.00511

Classifications

ECLASS

ECLASS-11.0	27440105
ECLASS-12.0	27440105
ECLASS-13.0	27440105

ETIM

ETIM 8.0	EC003623

UNSPSC

UNSPSC 21.0	31251500

Environmental Product Compliance

China RoHS	Environmentally Friendly Use Period = 50 years
	For information on hazardous substances, refer to the manufacturer’s declaration available under “Downloads”

Accessories

TSD-M 1,2NM - Torque screwdriver

1212224

https://www.phoenixcontact.com/pc/products/1212224



Torque screw driver, accuracy as per EN ISO 6789 standard, adjustable from 0. 3 - 1.2 Nm

SF-BIT-PH 1-70 - Screw insert

1212582

https://www.phoenixcontact.com/pc/products/1212582



Screw bit, PH crosshead, E6.3-1/4" drive, size: PH 1 x 70 mm, hardened, suitable for holder according to DIN 3126-F6.3/ISO 1173

SAC-3P-FS SCO V/.../... - Connecting cable

1406702

https://www.phoenixcontact.com/pc/products/1406702



Connecting cable, 3-position, Variable cable type, free cable end, on Socket straight M12 SPEEDCON, coding: A, cable length: Free input (0.2 ... 40.0 m), for valve plug adapters

SAC-3P-M12MS/3,0-PUR/M12FS 345 - Sensor/actuator cable

1402560

https://www.phoenixcontact.com/pc/products/1402560



Sensor/actuator cable, 3-position, Plug straight M12, coding: A, on Socket straight M12, coding: A, cable length: 3 m, For valve connector

SAC-3P-M12MS/5,0-PUR/M12FS 345 - Sensor/actuator cable

1402561

https://www.phoenixcontact.com/pc/products/1402561



Sensor/actuator cable, 3-position, Plug straight M12, coding: A, on Socket straight M12, coding: A, cable length: 5 m, For valve connector

SAC-3P-M12MS/10,0-PUR/M12FS 345 - Sensor/actuator cable

1402562

https://www.phoenixcontact.com/pc/products/1402562



Sensor/actuator cable, 3-position, Plug straight M12, coding: A, on Socket straight M12, coding: A, cable length: 10 m, For valve connector

Phoenix Contact 2023 © - all rights reserved
https://www.phoenixcontact.com

PHOENIX CONTACT GmbH & Co. KG
Flachsmarktstraße 8
D-32825 Blomberg
+49 (0) 5235-3 00
info@phoenixcontact.com