# Bend protection sleeve - CUC-DST-ABK-CP9 - 1419792

Please be informed that the data shown in this PDF Document is generated from our Online Catalog. Please find the complete data in the user's documentation. Our General Terms of Use for Downloads are valid (http://phoenixcontact.com/download)



Bend protection sleeve, degree of protection: IP20, color: black

RoHS IP20

## Key Commercial Data

| | |
|---|---|
| Packing unit | 1 |
| GTIN | 4 055626 188218 |
| GTIN | 4055626188218 |
| Custom tariff number | 39269097 |

## Technical data

### Mechanical characteristics

| | |
|---|---|
| Minimum external conductor diameter | 7 mm |
| Maximum external conductor diameter | 9 mm |
| Weight | 1.44 g |

### Ambient conditions

| | |
|---|---|
| Ambient temperature (operation) | -35 °C ... 100 °C |

### Material data

| | |
|---|---|
| Width | 14.9 mm |
| Height | 12.4 mm |
| Length | 28 mm |
| Depth | 17.2 mm |

### Environmental Product Compliance

| | |
|---|---|
| China RoHS | Environmentally friendly use period: unlimited = EFUP-e |

# Bend protection sleeve - CUC-DST-ABK-CP9 - 1419792

## Technical data

### Environmental Product Compliance

| | |
|---|---|
| | No hazardous substances above threshold values |

## Drawings

Dimensional drawing

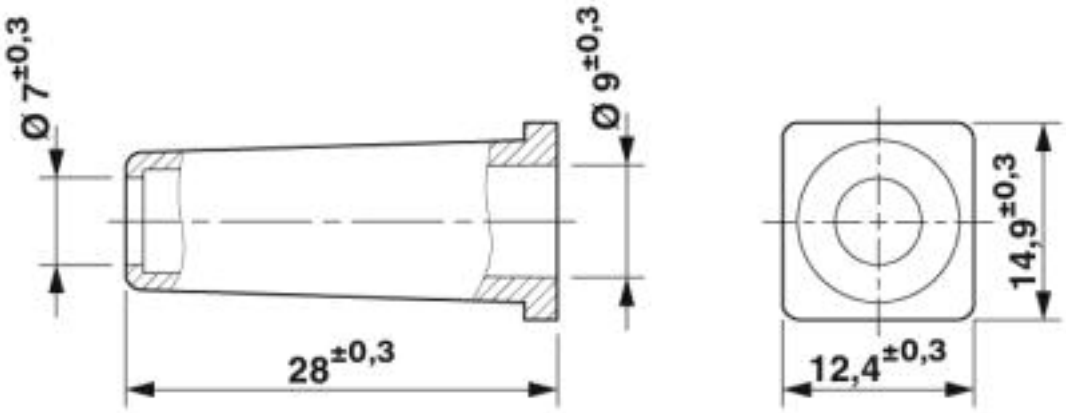


Bend protection sleeve

## Classifications

### eCl@ss

| | |
|---|---|
| eCl@ss 4.0 | 27260700 |
| eCl@ss 4.1 | 27260700 |
| eCl@ss 5.0 | 27260700 |
| eCl@ss 5.1 | 27261200 |
| eCl@ss 6.0 | 27261200 |
| eCl@ss 7.0 | 27440302 |
| eCl@ss 8.0 | 27440302 |
| eCl@ss 9.0 | 27440302 |

### ETIM

| | |
|---|---|
| ETIM 2.0 | EC000437 |
| ETIM 3.0 | EC000437 |
| ETIM 4.0 | EC000437 |
| ETIM 5.0 | EC001132 |
| ETIM 6.0 | EC001132 |
| ETIM 7.0 | EC001132 |

# Bend protection sleeve - CUC-DST-ABK-CP9 - 1419792

## Classifications

### UNSPSC

| | |
|---|---|
| UNSPSC 6.01 | 31261501 |
| UNSPSC 7.0901 | 31261501 |
| UNSPSC 11 | 31261501 |
| UNSPSC 12.01 | 31261501 |
| UNSPSC 13.2 | 39121522 |
| UNSPSC 18.0 | 39121522 |
| UNSPSC 19.0 | 39121522 |
| UNSPSC 20.0 | 39121522 |
| UNSPSC 21.0 | 39121522 |

## Approvals

### Approvals

Approvals

EAC

Ex Approvals

### Approval details

| | | |
|---|---|---|
| EAC | | B.01742 |

Phoenix Contact 2020 © - all rights reserved
http://www.phoenixcontact.com