Cable gland - G-INS-PG21-M68N-PNES-GY - 1411145

Please be informed that the data shown in this PDF Document is generated from our Online Catalog. Please find the complete data in the user's documentation. Our General Terms of Use for Downloads are valid (http://phoenixcontact.com/download)



Cable gland, cable gland material: PA, external cable diameter 13 mm ... 18 mm, shielding: no, connecting thread: Pg21, color: silver-gray RAL 7001

Your advantages

- Plastic material conforms to UL 746C f1

RoHS

Key Commercial Data

Packing unit	1 pc
Minimum order quantity	5 pc
GTIN	4 046356 922814
GTIN	4046356922814
Weight per Piece (excluding packing)	24.000 g
Custom tariff number	39269097
Country of origin	Turkey

Technical data

Dimensions

Length	49 mm
Wrench size, union nut	33 mm
Wrench size, support	33 mm
Hexagon angular dimension	37.8 mm
Length of the connecting thread	11 mm
Feed-through hole diameter	28.4 mm ... 28.6 mm
External cable diameter	13 mm ... 18 mm
	13 mm ... 18 mm (for UL 514 B)

Cable gland - G-INS-PG21-M68N-PNES-GY - 1411145

Technical data

Ambient conditions

Degree of protection (IP)	IP68 (5 bar / 0.5 h)
Ambient temperature (operation)	-40 °C ... 100 °C (static)

General

No. of conductors	1
Cable gland material	PA
Cable seal material	CR
Flammability rating according to UL 94	V2
	V2 (Housing)
Shielded	no
Thread type on connection side	Pg21
Torque	9 Nm ± ()
Color	silver-gray RAL 7001
Assembly instructions	1) Mount screw connection support in the housing using the correct torque 2) Insert cable 3) Tighten union nut using the correct torque
Manufacturer	BIMED
Manufacturer Designation	BS-06

Standards and Regulations

Halogen-free	no
Connection in acc. with standard	CSA
Flammability rating according to UL 94	V2

Environmental Product Compliance

China RoHS	Environmentally friendly use period: unlimited = EFUP-e
	No hazardous substances above threshold values

Drawings

Cable gland - G-INS-PG21-M68N-PNES-GY - 1411145

Dimensional drawing

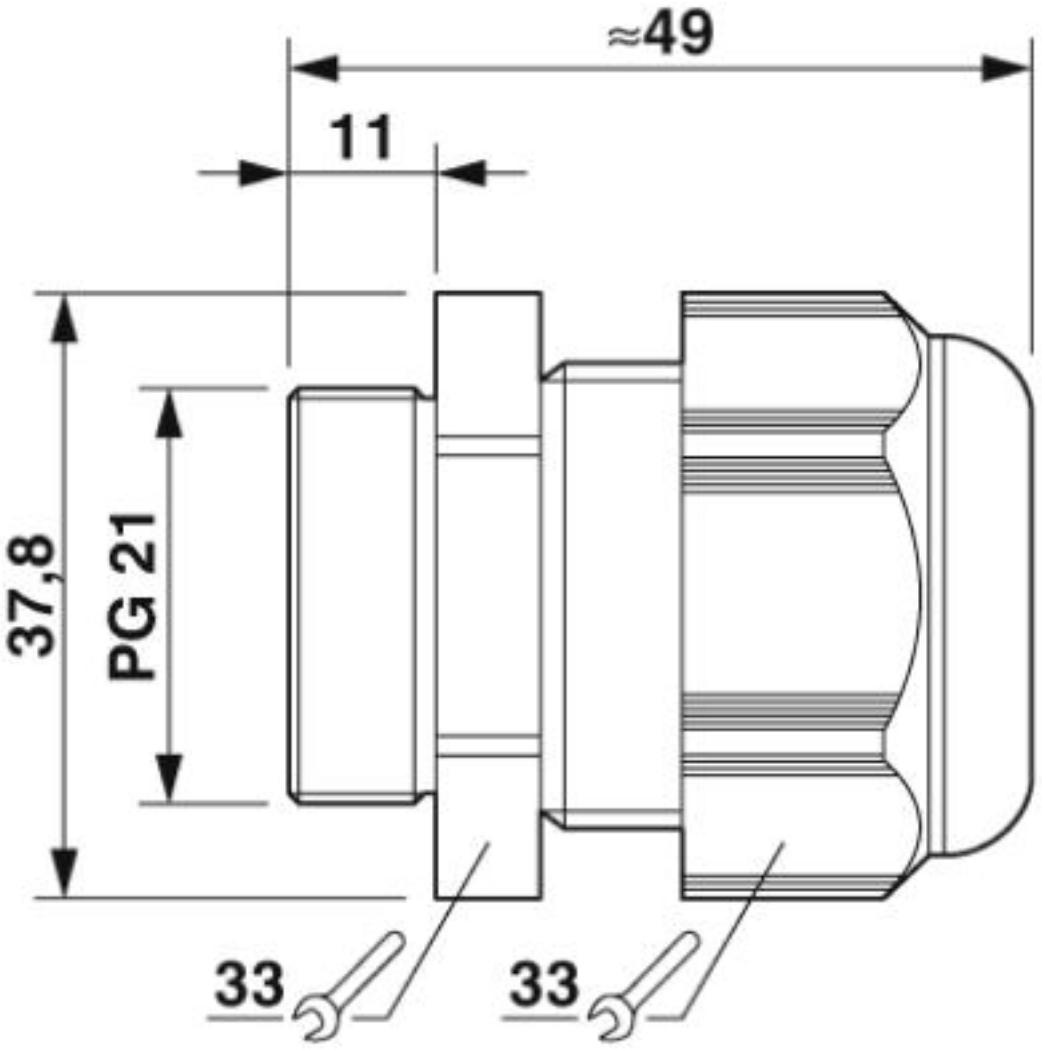

Dimensional drawing

Classifications

eCl@ss

eCl@ss 4.0	27141200
eCl@ss 4.1	27141200
eCl@ss 5.0	27149100
eCl@ss 5.1	27149100
eCl@ss 6.0	27149100

Cable gland - G-INS-PG21-M68N-PNES-GY - 1411145

Classifications

eCl@ss

eCl@ss 7.0	27149109
eCl@ss 8.0	27149109
eCl@ss 9.0	27144432

ETIM

ETIM 4.0	EC000441
ETIM 5.0	EC000441
ETIM 6.0	EC000441
ETIM 7.0	EC000441

UNSPSC

UNSPSC 13.2	39121311

Approvals

Approvals

Approvals

CSA / UL Listed / cUL Listed / cULus Listed

Ex Approvals

Approval details

CSA		http://www.csagroup.org/services-industries/product-listing/	115116
UL Listed		http://database.ul.com/cgi-bin/XYV/template/LISEXT/1FRAME/index.htm	E199260
cUL Listed		http://database.ul.com/cgi-bin/XYV/template/LISEXT/1FRAME/index.htm	E199260

Cable gland - G-INS-PG21-M68N-PNES-GY - 1411145

Approvals

cULus Listed

Accessories

Accessories

Flat nut

Counter nut - A-INL-PG21-P-GY - 1411226



Counter nut, material: PA, for threads Pg21, color: silver-gray RAL 7001

Sealing plugs

Closing cap - SEALING PLUG 17X17 RD - 1421861



Closing cap, material: PA, color: red

Phoenix Contact 2019 © - all rights reserved
http://www.phoenixcontact.com