Panasonic INDUSTRY

Aluminum Electrolytic Capacitors

This Series is no longer available for purchase in the country of Japan.



Radial Lead Type

FM-A series

Features

- Endurance : 105 ℃ 2000 h to 7000 h
- Low impedance (40 % to 70 % less than FC series)
- RoHS compliant

Specifications

Category temp. range	−40 ℃ to +105 ℃							
Rated voltage range	6.3 V to 50 V							
Capacitance range	22 μF to 6800 μF							
Capacitance tolerance	±20 % (120 Hz / +20℃)							
Leakage current	I ≦ 0.01 CV (μA) After 2 minutes							
Dissipation factor (tan δ)	Rated voltage (V)	6.3	10	16	25	35	50	(120 Hz /+20℃)
	Dissipation factor (tan δ)	0.22	0.19	0.16	0.14	0.12	0.10	
	For capacitance value ≧ 1000 μF, add 0.02 per every 1000 μF.							
Endurance	After following life test with DC voltage and +105 ℃±2 ℃ ripple current value applied (The sum of DC and ripple peak voltage shall not exceed the rated working voltage)when the capacitors are restored to 20 ℃, the capacitors shall meet the limits specified bellow. Duration ø5 to ø6.3 : 2000 h, ø8×11.5 to ø8×15: 3000 h ø8×20 to ø10×16 : 4000 h, ø10×20 to ø12.5×20/ ø16×20 : 5000 h ø12.5×25 to ø12.5×35/ ø16×25 : 7000 h							
	Capacitance change	Within ±25 % of the initial value (6.3 V to 10 V : ±30 %)						
	Dissipation factor (tan δ)	≦ 200 % of the initial limit						
	DC leakage current	Within the initial limit						
Shelf life	After storage for 1000 h at +105 ℃±2 ℃ with no voltage applied and then being stabilized at +20 °C, capacitors shall meet the limits specified in endurance. (With voltage treatment)							

Frequency correction factor for ripple current

Cap. (μF) \ Freq. (Hz)	60	120	1 k	10 k	100 k
2.2 to 33	0.45	0.55	0.75	0.90	1.00
47 to 330	0.60	0.70	0.85	0.95	1.00
390 to 1000	0.65	0.75	0.90	0.98	1.00
1200 to 6800	0.75	0.80	0.95	1.00	1.00

Dimensions

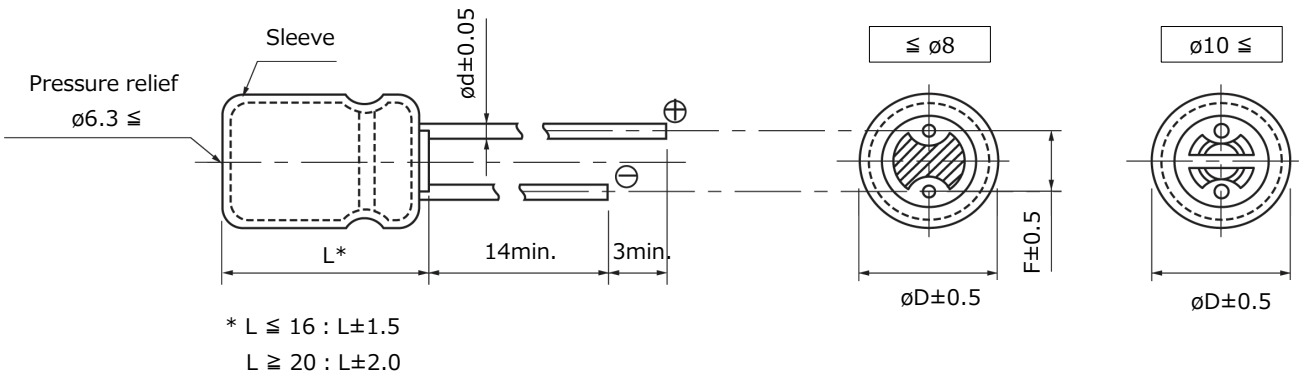

* L ≦ 16 : L±1.5
L ≧ 20 : L±2.0

Unit : mm

øD	5.0	6.3	8.0	10.0	12.5		16.0
L	—	—	—	—	12.5 to 25	30 to 40	—
ød	0.5	0.5	0.6	0.6	0.6	0.8	0.8
F	2.0	2.5	3.5	5.0	5.0	5.0	7.5

Design and specifications are each subject to change without notice. Ask factory for the current technical specifications before purchase and/or use.
Should a safety concern arise regarding this product, please be sure to contact us immediately.

Case size/ Impedance/ Ripple current

R. voltage (V) / Case size (mm) (øD×L)	6.3 to 35			50		
	Impedance*1 (Ω)		Ripple current*1 (mA rms)	Impedance*1 (Ω)		Ripple current*1 (mA rms)
	+20 ℃	-10 ℃	+105 ℃	+20 ℃	-10 ℃	+105 ℃
5 × 11	0.300	1.000	280	0.340	1.130	250
6.3 × 11.2	0.130	0.430	455	0.140	0.460	405
8 × 11.5	0.056	0.168	950	0.061	0.183	870
8 × 15	0.041	0.123	1240	0.045	0.135	1140
8 × 20	0.030	0.090	1560	0.033	0.099	1430
10 × 12.5	0.038	0.114	1290	0.042	0.126	1170
10 × 16	0.026	0.078	1790	0.030	0.090	1650
10 × 20	0.019	0.057	2180	0.023	0.069	1890
10 × 25	0.018	0.054	2470	0.022	0.066	2150
12.5 × 20	0.018	0.045	2600	0.022	0.055	2260
12.5 × 25	0.015	0.038	3190	0.018	0.045	2660
12.5 × 30	0.013	0.033	3630	0.016	0.040	3160
12.5 × 35	0.012	0.030	3750	0.014	0.035	3270
16 × 20	0.017	0.043	3300	0.019	0.048	2870
16 × 25	0.014	0.035	3820	0.016	0.040	3320

*1: 100 kHz

Characteristics list

Rated voltage (V)	Capacitance (±20 %) (μF)	Case size (mm)		Specification			Lead length (mm)				Part No.	Min. Packaging Q'ty (PCS)	
								Lead space					
		øD	L	Ripple current*1 (mA rms)	Impedance*2 (Ω)	Endurance (h)	Lead dia. (ød)	Straight	Taping ✻B	Taping ✻H		Straight leads	Taping
6.3	150	5.0	11.0	280	0.300	2000	0.5	2.0	5.0	2.5	EEUFM0J151( )	200	2000
	330	6.3	11.2	455	0.130	2000	0.5	2.5	5.0	2.5	EEUFM0J331( )	200	2000
	560	8.0	11.5	950	0.056	3000	0.6	3.5	5.0	—	EEUFM0J561( )	200	1000
	820	8.0	15.0	1240	0.041	3000	0.6	3.5	5.0	—	EEUFM0J821L( )	200	1000
	1000	10.0	12.5	1290	0.038	4000	0.6	5.0	5.0	—	EEUFM0J102( )	200	500
	1200	8.0	20.0	1560	0.030	4000	0.6	3.5	5.0	—	EEUFM0J122L( )	200	1000
		10.0	16.0	1790	0.026	4000	0.6	5.0	5.0	—	EEUFM0J122( )	200	500
	1500	10.0	20.0	2180	0.019	5000	0.6	5.0	5.0	—	EEUFM0J152( )	200	500
	2200	10.0	25.0	2470	0.018	5000	0.6	5.0	5.0	—	EEUFM0J222L( )	200	500
	3300	12.5	20.0	2600	0.018	5000	0.6	5.0	5.0	—	EEUFM0J332( )	200	500
	3900	12.5	25.0	3190	0.015	7000	0.6	5.0	5.0	—	EEUFM0J392( )	200	500
	4700	12.5	30.0	3630	0.013	7000	0.8	5.0	—	—	EEUFM0J472L	100	—
	5600	12.5	35.0	3750	0.012	7000	0.8	5.0	—	—	EEUFM0J562L	100	—
		16.0	20.0	3300	0.017	5000	0.8	7.5	7.5	—	EEUFM0J562S( )	100	250
	6800	16.0	25.0	3820	0.014	7000	0.8	7.5	7.5	—	EEUFM0J682( )	100	250
10	100	5.0	11.0	280	0.300	2000	0.5	2.0	5.0	2.5	EEUFM1A101( )	200	2000
	220	6.3	11.2	455	0.130	2000	0.5	2.5	5.0	2.5	EEUFM1A221( )	200	2000
	470	8.0	11.5	950	0.056	3000	0.6	3.5	5.0	—	EEUFM1A471( )	200	1000
	680	8.0	15.0	1240	0.041	3000	0.6	3.5	5.0	—	EEUFM1A681L( )	200	1000
		10.0	12.5	1290	0.038	4000	0.6	5.0	5.0	—	EEUFM1A681( )	200	500
	1000	8.0	20.0	1560	0.030	4000	0.6	3.5	5.0	—	EEUFM1A102L( )	200	1000
		10.0	16.0	1790	0.026	4000	0.6	5.0	5.0	—	EEUFM1A102( )	200	500
	1200	10.0	20.0	2180	0.019	5000	0.6	5.0	5.0	—	EEUFM1A122( )	200	500
	1500	10.0	25.0	2470	0.018	5000	0.6	5.0	5.0	—	EEUFM1A152L( )	200	500
	2200	12.5	20.0	2600	0.018	5000	0.6	5.0	5.0	—	EEUFM1A222( )	200	500
	3300	12.5	25.0	3190	0.015	7000	0.6	5.0	5.0	—	EEUFM1A332( )	200	500
	3900	12.5	30.0	3630	0.013	7000	0.8	5.0	—	—	EEUFM1A392L	100	—
		16.0	20.0	3300	0.017	5000	0.8	7.5	7.5	—	EEUFM1A392S( )	100	250
	4700	12.5	35.0	3750	0.012	7000	0.8	5.0	—	—	EEUFM1A472L	100	—
	5600	16.0	25.0	3820	0.014	7000	0.8	7.5	7.5	—	EEUFM1A562( )	100	250
16	68	5.0	11.0	280	0.300	2000	0.5	2.0	5.0	2.5	EEUFM1C680( )	200	2000
	120	6.3	11.2	455	0.130	2000	0.5	2.5	5.0	2.5	EEUFM1C121( )	200	2000
	330	8.0	11.5	950	0.056	3000	0.6	3.5	5.0	—	EEUFM1C331( )	200	1000
	470	8.0	15.0	1240	0.041	3000	0.6	3.5	5.0	—	EEUFM1C471L( )	200	1000
		10.0	12.5	1290	0.038	4000	0.6	5.0	5.0	—	EEUFM1C471( )	200	500
	680	8.0	20.0	1560	0.030	4000	0.6	3.5	5.0	—	EEUFM1C681L( )	200	1000
		10.0	16.0	1790	0.026	4000	0.6	5.0	5.0	—	EEUFM1C681( )	200	500
	1000	10.0	20.0	2180	0.019	5000	0.6	5.0	5.0	—	EEUFM1C102( )	200	500
	1200	10.0	25.0	2470	0.018	5000	0.6	5.0	5.0	—	EEUFM1C122L( )	200	500
	1500	12.5	20.0	2600	0.018	5000	0.6	5.0	5.0	—	EEUFM1C152( )	200	500
	2200	12.5	25.0	3190	0.015	7000	0.6	5.0	5.0	—	EEUFM1C222( )	200	500
	2700	12.5	30.0	3630	0.013	7000	0.8	5.0	—	—	EEUFM1C272L	100	—
		16.0	20.0	3300	0.017	5000	0.8	7.5	7.5	—	EEUFM1C272S( )	100	250
	3300	12.5	35.0	3750	0.012	7000	0.8	5.0	—	—	EEUFM1C332L	100	—
	3900	16.0	25.0	3820	0.014	7000	0.8	7.5	7.5	—	EEUFM1C392( )	100	250

*1: Ripple current (100 kHz / +105 ℃)
*2: Impedance (100 kHz / +20 ℃)
・When requesting taped product, please put the letter "B" or "H" be tween the "( )".
Lead wire pitch ✻B=5 mm, 7.5 mm, H=2.5 mm.
・Please refer to the page of “Taping dimensions”.

Design and specifications are each subject to change without notice. Ask factory for the current technical specifications before purchase and/or use.
Should a safety concern arise regarding this product, please be sure to contact us immediately.

Characteristics list

Rated voltage (V)	Capacitance (±20 %) (μF)	Case size (mm)		Specification			Lead length (mm)				Part No.	Min. Packaging Q'ty (PCS)	
								Lead space					
		øD	L	Ripple current*1 (mA rms)	Impe-dance*2 (Ω)	Endu-rance (h)	Lead dia. (ød)	Straight	Taping ✻B	Taping ✻H		Straight leads	Taping
25	47	5.0	11.0	280	0.300	2000	0.5	2.0	5.0	2.5	EEUFM1E470( )	200	2000
	100	6.3	11.2	455	0.130	2000	0.5	2.5	5.0	2.5	EEUFM1E101( )	200	2000
	220	8.0	11.5	950	0.056	3000	0.6	3.5	5.0	—	EEUFM1E221( )	200	1000
	330	8.0	15.0	1240	0.041	3000	0.6	3.5	5.0	—	EEUFM1E331L( )	200	1000
		10.0	12.5	1290	0.038	4000	0.6	5.0	5.0	—	EEUFM1E331( )	200	500
	470	8.0	20.0	1560	0.030	4000	0.6	3.5	5.0	—	EEUFM1E471L( )	200	1000
		10.0	16.0	1790	0.026	4000	0.6	5.0	5.0	—	EEUFM1E471( )	200	500
	680	10.0	20.0	2180	0.019	5000	0.6	5.0	5.0	—	EEUFM1E681( )	200	500
	820	10.0	25.0	2470	0.018	5000	0.6	5.0	5.0	—	EEUFM1E821L( )	200	500
	1000	12.5	20.0	2600	0.018	5000	0.6	5.0	5.0	—	EEUFM1E102( )	200	500
	1500	12.5	25.0	3190	0.015	7000	0.6	5.0	5.0	—	EEUFM1E152( )	200	500
	1800	12.5	30.0	3630	0.013	7000	0.8	5.0	—	—	EEUFM1E182L	100	—
		16.0	20.0	3300	0.017	5000	0.8	7.5	7.5	—	EEUFM1E182S( )	100	250
	2200	12.5	35.0	3750	0.012	7000	0.8	5.0	—	—	EEUFM1E222L	100	—
	2700	16.0	25.0	3820	0.014	7000	0.8	7.5	7.5	—	EEUFM1E272( )	100	250
35	33	5.0	11.0	280	0.300	2000	0.5	2.0	5.0	2.5	EEUFM1V330( )	200	2000
	68	6.3	11.2	455	0.130	2000	0.5	2.5	5.0	2.5	EEUFM1V680( )	200	2000
	150	8.0	11.5	950	0.056	3000	0.6	3.5	5.0	—	EEUFM1V151( )	200	1000
	220	8.0	15.0	1240	0.041	3000	0.6	3.5	5.0	—	EEUFM1V221L( )	200	1000
		10.0	12.5	1290	0.038	4000	0.6	5.0	5.0	—	EEUFM1V221( )	200	500
	330	8.0	20.0	1560	0.030	4000	0.6	3.5	5.0	—	EEUFM1V331L( )	200	1000
		10.0	16.0	1790	0.026	4000	0.6	5.0	5.0	—	EEUFM1V331( )	200	500
	470	10.0	20.0	2180	0.019	5000	0.6	5.0	5.0	—	EEUFM1V471( )	200	500
	560	10.0	25.0	2470	0.018	5000	0.6	5.0	5.0	—	EEUFM1V561L( )	200	500
	680	12.5	20.0	2600	0.018	5000	0.6	5.0	5.0	—	EEUFM1V681( )	200	500
	1000	12.5	25.0	3190	0.015	7000	0.6	5.0	5.0	—	EEUFM1V102( )	200	500
	1200	12.5	30.0	3630	0.013	7000	0.8	5.0	—	—	EEUFM1V122L	100	—
		16.0	20.0	3300	0.017	5000	0.8	7.5	7.5	—	EEUFM1V122S( )	100	250
	1500	12.5	35.0	3750	0.012	7000	0.8	5.0	—	—	EEUFM1V152L	100	—
	1800	16.0	25.0	3820	0.014	7000	0.8	7.5	7.5	—	EEUFM1V182( )	100	250
50	22	5.0	11.0	250	0.340	2000	0.5	2.0	5.0	2.5	EEUFM1H220( )	200	2000
	56	6.3	11.2	405	0.140	2000	0.5	2.5	5.0	2.5	EEUFM1H560( )	200	2000
	100	8.0	11.5	870	0.061	3000	0.6	3.5	5.0	—	EEUFM1H101( )	200	1000
	120	8.0	15.0	1140	0.045	3000	0.6	3.5	5.0	—	EEUFM1H121L( )	200	1000
	150	10.0	12.5	1170	0.042	4000	0.6	5.0	5.0	—	EEUFM1H151( )	200	500
	180	8.0	20.0	1430	0.033	4000	0.6	3.5	5.0	—	EEUFM1H181L( )	200	1000
	220	10.0	16.0	1650	0.030	4000	0.6	5.0	5.0	—	EEUFM1H221( )	200	500
	270	10.0	20.0	1890	0.023	5000	0.6	5.0	5.0	—	EEUFM1H271( )	200	500
	330	10.0	25.0	2150	0.022	5000	0.6	5.0	5.0	—	EEUFM1H331L( )	200	500
	470	12.5	20.0	2260	0.022	5000	0.6	5.0	5.0	—	EEUFM1H471( )	200	500
	560	12.5	25.0	2660	0.018	7000	0.6	5.0	5.0	—	EEUFM1H561( )	200	500
	680	12.5	30.0	3160	0.016	7000	0.8	5.0	—	—	EEUFM1H681L	100	—
	820	12.5	35.0	3270	0.014	7000	0.8	5.0	—	—	EEUFM1H821L	100	—
		16.0	20.0	2870	0.019	5000	0.8	7.5	7.5	—	EEUFM1H821S( )	100	250
	1000	16.0	25.0	3320	0.016	7000	0.8	7.5	7.5	—	EEUFM1H102( )	100	250

*1: Ripple current (100 kHz / +105 ℃)
*2: Impedance (100 kHz / +20 ℃)
・When requesting taped product, please put the letter "B" or "H" be tween the "( )".
Lead wire pitch ✻B=5 mm, 7.5 mm, H=2.5 mm.
・Please refer to the page of “Taping dimensions”.

Guidelines and precautions regarding the technical information and use of our products described in this online catalog.

- If you want to use our products described in this online catalog for applications requiring special qualities or reliability, or for applications where the failure or malfunction of the products may directly jeopardize human life or potentially cause personal injury (e.g. aircraft and aerospace equipment, traffic and transportation equipment, combustion equipment, medical equipment, accident prevention, anti-crime equipment, and/or safety equipment), it is necessary to verify whether the specifications of our products fit to such applications. Please ensure that you will ask and check with our inquiry desk as to whether the specifications of our products fit to such applications use before you use our products.

- The quality and performance of our products as described in this online catalog only apply to our products when used in isolation. Therefore, please ensure you evaluate and verify our products under the specific circumstances in which our products are assembled in your own products and in which our products will actually be used.

- If you use our products in equipment that requires a high degree of reliability, regardless of the application, it is recommended that you set up protection circuits and redundancy circuits in order to ensure safety of your equipment.

- The products and product specifications described in this online catalog are subject to change for improvement without prior notice. Therefore, please be sure to request and confirm the latest product specifications which explain the specifications of our products in detail, before you finalize the design of your applications, purchase, or use our products.

- The technical information in this online catalog provides examples of our products' typical operations and application circuits. We do not guarantee the non-infringement of third party's intellectual property rights and we do not grant any license, right, or interest in our intellectual property.

- If any of our products, product specifications and/or technical information in this online catalog is to be exported or provided to non-residents, the laws and regulations of the exporting country, especially with regard to security and export control, shall be observed.

<Regarding the Certificate of Compliance with the EU RoHS Directive/REACH Regulations>

- The switchover date for compliance with the RoHS Directive/REACH Regulations varies depending on the part number or series of our products.

- When you use the inventory of our products for which it is unclear whether those products are compliant with the RoHS Directive/REACH Regulation, please select "Sales Inquiry" in the website inquiry form and contact us.

We do not take any responsibility for the use of our products outside the scope of the specifications, descriptions, guidelines and precautions described in this online catalog.

Notices

■ Applicable laws and regulations

・This product complies with the RoHS Directive (Restriction of the use of certain hazardous substances in electrical and electronic equipment (DIRECTIVE 2011/65/EU and (EU)2015/863)).
・No Ozone Depleting Chemicals(ODC's), controlled under the Montreal Protocol Agreement, are used in producing this product.
We do not use PBBs or PBDEs as brominated flame retardants.
・Export procedure which followed export related regulations, such as foreign exchange and a foreign trade method, on the occasion of export of this product.
・These products are not dangerous goods on the transportation as identified by UN(United Nations) numbers or UN classification.

■ Limited applications

・This capacitor is designed to be used for electronics circuits such as audio/visual equipment, home appliances, computers and other office equipment, optical equipment, measuring equipment.
・An advanced specification must be signed individually for high-reliability use that might threaten human life or property due to a malfunction of the capacitor.

■ Intellectual property rights and licenses

・The technical information in this specification provides examples of our products' typical operations and application circuits. We do not guarantee the non-infringement of third party's intellectual property rights and we do not grant any license, right, or interest in our intellectual property.

Items to be observed

■ For specification

・This specification guarantees the quality and performance of the product as individual components.
The durability differs depending on the environment and the conditions of usage.
Before use, check and evaluate their compatibility with actual conditions when installed in the products.
When safety requirements cannot be satisfied in your technical examination, inform us immediately.
・Do not use the products beyond the specifications described in this document.

■ Upon application to products where safety is regarded as important

Install the following systems for a failsafe design to ensure safety if these products are to be used in equipment where a defect in these products may cause the loss of human life or other signification damage, such as damage to vehicles (automobile, train, vessel), traffic lights, medical equipment, aerospace equipment, electric heating appliances, combustion/ gas equipment, rotating rotating equipment, and disaster/crime prevention equipment.

(1) The system is equipped with a protection circuit and protection device.
(2) The system is equipped with a redundant circuit or other system to prevent an unsafe status in the event of a single fault.

■ Conditions of use

・Before using the products, carefully check the effects on their quality and performance, and determined whether or not they can be used. These products are designed and manufactured for general-purpose and standard use in general electronic equipment. These products are not intended for use in the following special conditions.

(1) In liquid, such as Water, Oil, Chemicals, or Organic solvent.
(2) In direct sunlight, outdoors, or in dust.
(3) In vapor, such as dew condensation water of resistive element, or water leakage, salty air, or air with a high concentration corrosive gas, such as Cl_2, H_2S, NH_3, SO_2, or NOx.
(4) In an environment where strong static electricity or electromagnetic waves exist.
(5) Mounting or placing heat-generating components or inflammables, such as vinyl-coated wires, near these products.
(6) Sealing or coating of these products or a printed circuit board on which these products are mounted, with resin and other material.
(7) Using resolvent, water or water-soluble cleaner for flux cleaning agent after soldering. (In particular, when using water or a water-soluble cleaning agent, be careful not to leave water residues)
(8) Using in the atmosphere where strays acid or alkaline.
(9) Using in the atmosphere where there are excessive vibration and shock.
(10) Using in the atmosphere where there are low pressure or decompression.

・Please arrange circuit design for preventing impulse or transitional voltage.
Do not apply voltage, which exceeds the full rated voltage when the capacitors receive impulse voltage, instantaneous high voltage, high pulse voltage etc.
・Our products there is a product are using an electrolyte solution. Therefore, misuse can result in rapid deterioration of characteristics and functions of each product. Electrolyte leakage damages printed circuit and affects performance, characteristics, and functions of customer system.

⚠Application guidelines（Radial lead Type）

1. Circuit design

1.1 Operating temperature and frequency

Electrical characteristics of the capacitor are likely to change due to variation in temperature and/or frequency. Circuit designers should take these changes into consideration.

(1) Effects of operating temperature on electrical parameters

At higher temperatures : leakage current and capacitance increase while equivalent series resistance (ESR) decreases.

At lower temperatures : leakage current and capacitance decrease while equivalent series resistance (ESR) increases.

(2) Effects of frequency on electrical parameters

At higher frequencies : capacitance and impedance decrease while tan d increases.

At lower frequencies : heat generated by ripple current will rise due to an increase in equivalent series resistance (ESR).

1.2 Operating temperature and life expectancy

(1) Expected life is affected by operating temperature. Generally, each 10 °C reduction in temperature will double the expected life. Use capacitors at the lowest possible temperature below the upper category temperature.

(2) If operating temperatures exceed the upper category limit, rapid deterioration of electrical parameter will occur and irreversible damage will result.
Check for the maximum capacitor operating temperatures including ambient temperature, internal capacitor temperature rise due to ripple current, and the effects of radiated heat from power transistors, IC's or resistors.
Avoid placing components, which could conduct heat to the capacitor from the back side of the circuit board.

(3) The formula for calculating expected life at lower operating temperatures is as follows ;

$$L_2 = L_1 \times 2^{\frac{T_1 - T_2}{10}}$$

L_1 : Guaranteed life (h) at temperature, T_1 °C
L_2 : Expected life (h) at temperature, T_2 °C
T_1 : Upper category temperature + temperature rise due to rated ripple current (°C)
T_2 : Actual operating temperature, ambient temperature + temperature rise due to ripple current (°C)

(4) Using the capacitor beyond the estimated lifetime will result in short circuit, electrolyte leak, vent open, and large deterioration of characteristics. The lifetime cannot go above 15 years due to aging of sealing rubber.

1.3 Common application conditions to avoid

The following misapplication load conditions will cause rapid deterioration of a capacitor's electrical parameters. In addition, rapid heating and gas generation within the capacitor can occur, causing the pressure relief vent to operate and resultant leakage of electrolyte. Under extreme conditions, explosion and fire ignition could result. The leaked electrolyte is combustible and electrically conductive.

(1) Reverse voltage
DC capacitors have polarity. Therefore, please do not apply the reverse voltage. Verify correct polarity before insertion.
For circuits with changing or uncertain polarity, use DC bipolar capacitors. DC bipolar capacitors are not suitable for use in AC circuits.

(2) Charge / Discharge applications
Standard capacitors are not suitable for use in repeating charge/discharge applications. For charge/discharge applications, consult us with your actual application condition.
For rush current, please to nor exceed 100 A.

(3) ON-OFF circuit
Do not use capacitors in circuit where ON-OFF switching is repeated more than 10000 times/per day.
In case of applying to the theses ON-OFF circuit, consult with us about circuit condition and so on.

(4) Over voltage

Do not apply voltages exceeding the maximum specified rated voltage. Voltages up to the surge voltage rating are acceptable for short periods of time.

Ensure that the sum of the DC voltage and the superimposed AC ripple voltage does not exceed the rated voltage.

(5) Ripple current

Do not apply ripple currents exceeding the maximum specified value. For high ripple current applications, use a capacitor designed for high ripple currents. In addition, consult us if the applied ripple current is to be higher than the maximum specified value. Ensure that rated ripple currents that superimposed on low DC bias voltages do not cause reverse voltage conditions.

Even if it is within a rated ripple current, in case the practical use is over the pre described endurance lifetime, it causes the increase of deterioration of ESR characteristic and the internal generation heat by ripple current. Due to this, there is some possibility of vent open, bulging of sleeve and rubber, electrolyte leakage, and shot circuit, explosion and ignition in the worst case.

1.4 Using two or more capacitors in parallel

(1) Capacitors connected in parallel

The circuit resistance can closely approximate the series resistance of the capacitor, causing an imbalance of ripple current loads within the capacitors. Careful wiring methods can minimize the possible application of an excessive ripple current to a capacitor.

(2) Capacitors connected in series

Differences in normal DC leakage current among capacitors can cause voltage imbalances.

The use of voltage divider shunt resistors with consideration to leakage currents can prevent capacitor voltage imbalances.

NOTE : Please do not use in the series in the case of conductive polymer hybrid aluminum electrolytic capacitor.

1.5 Capacitor mounting considerations

(1) Double-sided circuit boards

Avoid wiring pattern runs, which pass between the mounted capacitor and the circuit board.

When dipping into a solder bath, an excess solder may deposit under the capacitor by capillary action, causing short circuit between anode and cathode terminals.

(2) Circuit Board Hole Positioning

The vinyl sleeve of the capacitor can be damaged if solder passes through a lead hole into the subsequently processed parts.

Special care when locating hole positions in proximity to capacitors is recommended.

(3) Circuit Board Hole Spacing

The spacing of circuit board holes should match the lead wire spacing of capacitors within the specified tolerances. Incorrect spacing can cause an excessive lead wire stress during the insertion process.

This may result in premature capacitor failure due to the short or open circuit, increased leakage current, or electrolyte leakage.

(4) Clearance for case mounted pressure relief

Capacitors with case mounted pressure relief require sufficient clearance to allow for proper pressure relief operation.

The minimum clearance are dependent on capacitor diameters as follows.

(Dia 10 mm to Dia 16 mm : 2 mm minimum, Dia 18 mm : 3 mm minimum)

(5) Wiring near the pressure relief

Avoid locating high voltage or high current wiring or circuit board paths above the pressure relief.

Flammable, high temperature gas that exceeds 100 °C may be released which could dissolve the wire insulation and ignite.

(6) Circuit board patterns under the capacitor

Avoid circuit board runs under the capacitor, as an electrical short can occur due to an electrolyte leakage.

(7) Please note the resonant after product implementation

The vicinity of the resonant point will take a heavy load on the capacitor.

Capacitors can cause rapid change in characteristics and dropout by this load.

1.6 Electrical isolation of the capacitor

Completely isolate the capacitor as follows.

Between the cathode and the case and between the anode terminal and other circuit paths.

1.7 Capacitor Sleeve

The vinyl sleeve or laminate coating is intended for marking and identification purposes and is not meant to electrically insulate the capacitor.
The sleeve may split or crack if immersed into solvents such as toluene or xylene and then subsequently exposed to high temperatures.

2. Capacitor handling techniques

2.1 Considerations before using

(1) Capacitors have a finite life. Do not reuse or recycle capacitors from used equipment.
(2) Transient recovery voltage may be generated in the capacitor due to dielectric absorption.
If required, this voltage can be discharged with a resistor with a value of about 1 kΩ.
(3) Capacitors stored for a long period of time may exhibit an increase in leakage current.
This can be corrected by gradually applying rated voltage in series with a resistor of approximately 1 kΩ.
(4) If capacitors are dropped, they can be damaged mechanically or electrically. Avoid using dropped capacitors.
(5) Dented or crushed capacitors should not be used.
The seal integrity can be damaged and loss of electrolyte/ shortened life can result.

2.2 Capacitor insertion

(1) Verify the correct capacitance and rated voltage of the capacitor.
(2) Verify the correct polarity of the capacitor before insertion.
(3) Verify the correct terminal dimension and land pattern size before mount to avoid stress on the terminals.
(4) Ensure that the lead clinching operation done by auto insertion equipments does not stress the capacitor leads where they enter the seal of the capacitor.

2.3 Flow Soldering

(1) Do not immerse the capacitor body into the solder bath as excessive internal pressure could result.
(2) Apply proper soldering conditions (temperature, time, etc.). Do not exceed the specified limits.
(3) Do not allow other parts or components to touch the capacitor during soldering.
(4) Radial lead type capacitors are not allowed for the reflow soldering.

2.4 Manual soldering

(1) Apply soldering conditions (temperature and time) based on the specification, or do not exceed temperature of 350 ℃ for 3 seconds or less.
(2) If lead wires must be modified to meet terminal board hole spacing, avoid stress on the lead wire where it enters the capacitor seal.
(3) If a soldered capacitor must be removed and reinserted, avoid excessive stress on the capacitor leads.
(4) Avoid physical contacts between the tip of the soldering iron and capacitors to prevent melting of the vinyl sleeve.

2.5 Other Soldering Considerations

Rapid temperature rise during the preheat operation and resin bonding operation can cause cracking of the capacitor's vinyl sleeve.
For heat curing, do not exceed 150 °C for the maximum time of 2 minutes.

2.6 Capacitor handling after soldering

(1) Avoid moving the capacitor after soldering to prevent excessive stress on the lead wires where they enter the seal. The capacitor may break from element portion due to a torque at outer rim, causing a large stress to terminals.
(2) Do not use the capacitor as a handle when moving the circuit board assembly. The total weight of the board would apply to element portion through terminals, and the capacitor may break.
(3) Avoid striking the capacitor after assembly to prevent failure due to excessive shock. The capacitor may break due to excessive shock or load above specified range.

2.7 Circuit board cleaning

(1) Circuit boards can be immersed or ultrasonically cleaned using suitable cleaning solvents for up to 5 minutes and up to 60 °C maximum temperatures. The boards should be thoroughly rinsed and dried.
The use of ozone depleting cleaning agents is not recommended for the purpose of protecting our environment.
【Target solvent】
Pine Alpha ST-100S, Aqua Cleaner 210SEP, Clean-thru 750H / 750L / 710M, Sunelec B-12, Sunelec B-12, Cold Cleaner P3-375, Techno Cleaner 219, DK Be-clear CW-5790, Telpene Cleaner EC-7R, Technocare FRW-17 / FRW-1 / FRV-1

(2) Avoid using the following solvent groups unless specifically allowed in the specification ;
(a) Halogenated cleaning solvents : except for solvent resistant capacitor types, halogenated solvents can permeate the seal and cause internal capacitor corrosion and failure.
For solvent resistant capacitors, carefully follow the temperature and time requirements based on the specification. 1,1,1-trichloroethane should never be used on any aluminum electrolytic capacitor.
(b) Alkaline solvents : could react and dissolve the aluminum case.
(c) Petroleum based solvents : deterioration of the rubber seal could result.
(d) Xylene : deterioration of the rubber seal could result.
(e) Acetone : removal of the ink markings on the vinyl sleeve could result.
(3) A thorough drying after cleaning is required to remove residual cleaning solvents that may be trapped between the capacitor and the circuit board. Avoid drying temperatures, which exceed the upper category temperature of the capacitor.
(4) Monitor the contamination levels of the cleaning solvents during use in terms of electrical conductivity, pH, specific gravity, or water content.
Chlorine levels can rise with contamination and adversely affect the performance of the capacitor.
Control the flux density in the cleaning agent to be less than 2 mass%.
(5) Depending on the cleaning method, the marking on a capacitor may be erased or blurred.
※ Please consult us if you are not certain about acceptable cleaning solvents or cleaning methods.

2.8 Mounting adhesives and coating agents

When using mounting adhesives or coating agents to control humidity, avoid using materials containing halogenated solvents.
Also, avoid the use of chloroprene based polymers.
Harden on dry adhesive or coating agents well lest the solvent should be left.
After applying adhesives or coatings, dry thoroughly to prevent residual solvents from being trapped between the capacitor and the circuit board.

2.9 Fumigation

In exporting electronic appliances with aluminum electrolytic capacitors, in some cases fumigation treatment using such halogen compound as methyl bromide is conducted for wooden boxes.
If such boxes are not dried well, the halogen left in the box is dispersed while transported and enters in the capacitors inside.
This possibly causes electrical corrosion of the capacitors. Therefore, after performing fumigation and drying make sure that no halogen is left.
Don't perform fumigation treatment to the whole electronic appliances packed in a box.
Leave more than 1/3 of the sealing portion open, and do not cover that portion with any adhesives or coating.

2.10 Flux

If you use a halogen type (Chlorine type, Bromine type, etc.) high-activity flux, please use it after confirmation in advance, as it may have an impact on performance and reliability of this product due to the residue of the flux.

3. Precautions for using capacitors

3.1 Environmental conditions

Capacitors should not be stored or used in the following environments.
(1) Exposure to temperatures above the upper category or below the lower category temperature of the capacitor.
(2) Direct contact with water, salt water, or oil.
(3) High humidity conditions where water could condense on the capacitor.
(4) Exposure to toxic gases such as hydrogen sulfide, sulfuric acid, nitric acid, chlorine, chlorine compound, bromine, bromine compound or ammonia.
(5) Exposure to ozone, radiation, or ultraviolet rays.
(6) Vibration and shock conditions exceeding specified requirements.
Even within the specified requirements, a large vibration acceleration may be applied due to resonance, so be sure to evaluate and confirm with the actual product.

3.2 Electrical precautions

(1) Avoid touching the terminals of a capacitor as a possible electric shock could result. The exposed aluminum case is not insulated and could also cause electric shock if touched.
(2) Avoid short circuiting the area between the capacitor terminals with conductive materials including liquids such as acids or alkaline solutions.
(3) A low-molecular-weight-shiroxane which is included in a silicon material shall causes abnormal electrical characteristics.

4. Emergency procedures

(1) If the pressure relief of the capacitor operates, immediately turn off the equipment and disconnect from the power source.
This will minimize an additional damage caused by the vaporizing electrolyte.
(2) Avoid contact with the escaping electrolyte gas, which can exceed 100 °C temperatures.
If electrolyte or gas enters the eye, immediately flush the eye with large amounts of water.
If electrolyte or gas is ingested by mouth, gargle with water.
If electrolyte contacts the skin, wash with soap and water.

5. Long term storage

(1) Leakage current of a capacitor increases with long storage times. The aluminum oxide film deteriorates as a function of temperature and time.
If used without reconditioning, an abnormally high current will be required to restore the oxide film.
This surge current could cause the circuit or the capacitor to fail.
Expiration date is 42 months from outgoing inspection date.
However, expiration date for series which are not listed below is 12 months from outgoing inspection date.

Series	Expiration date
FC, FK, HD, TA, TP	42 months from outgoing inspection date

For storage condition, keep room temperature (5 °C to 35 °C) and humidity (45 % to 85 %) where direct sunshine doesn't reach.

(2) Environmental Conditions
Do not store under condition outside the area described in the specification, and also under conditions listed below.
(a) Exposure to temperatures above the upper category or below the lower category temperature of the capacitor.
(b) Direct contact with water, salt water, or oil.
(c) High humidity conditions where water could condense on the capacitor.
(d) Exposure to toxic gases such as hydrogen sulfide, sulfuric acid, nitric acid, chlorine, Chlorine compound, Bromine, Bromine compound or ammonia.
(e) Exposure to ozone, radiation, or ultraviolet rays.
(f) Vibration and shock conditions exceeding specified requirements.

6. Capacitor disposal

When disposing capacitors, use one of the following methods.
(1) Incinerate after crushing the capacitor or puncturing the can wall (to prevent explosion due to internal pressure rise).
(2) Dispose as solid waste.

NOTE : Local laws may have specific disposal requirements which must be followed.

The precautions in using aluminum electrolytic capacitors follow the "Safety application guide for the use in fixedaluminum electrolytic capacitors for electronic equipment", RCR-2367D issued by JEITA in October 2017.
Please refer to the above application guide for details.