Panasonic
ideas for life

Amplifier Built-in
Compact Photoelectric Sensor

CX-400 SERIES Ver.2

Conforming to EMC Directive | UL Recognition | Certified (Some models only)

World Standard



Upgraded to Increase Usability

Achieving low power consumption and high noise-resistance

2010.11 | panasonic-electric-works.net/sunx

18/07/2011

Panasonic Electric Works SUNX

The world standard CX-400 series

Sensors that are environmentally and user friendly.

The total lineup of 148 models covers through the inclusion of a newly developed custom integrated circuit. This **CX-400** series upgrade achieves a significantly higher reliability in the same package as the older model.



Providing stable detection with low power consumption

Includes an analog CMOS processor ASIC

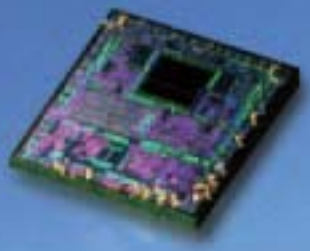

Strong

Demonstrating stable detection, even in harsh environments



The **CX-400** series incorporates an acrylic that strongly resists oils and coolant fluids, and a polycarbonate indicator cover that strongly resists ethanol .The **CX-400** series is also characterized by strong resistance to noise, reciprocal interference and cold environments.

Resistant to oil and coolant liquids CX-41□/42□/49□

The lens material is made of a strong acrylic that resists the harmful effects of coolants. These sensors can be used with confidence even around metal processing machine that disperse oil mists.

Test Oil	JIS Standard	Product Name
Lubricant	-	Velocity Oil No. 3
Water-insoluble cutting oil	2-5	Daphnecut AS-30D
	2-11	Yushiron Oil No.2ac (Note)
Water-soluble cutting oil	W1-1	Yushiron Lubic HWC68 (Note)
	W2-1	Yushiroken S50N (Note)

1,000 hours; Immersion (depth 0 m); Insulation resistance 20 MΩ/250 V

Note: Yushiron and Yushiroken are registered trademarks of Yushiro Chemical Industry Co., Ltd.

Strongly ethanol resistant CX-44□/48□

Incorporates a polycarbonate indicator cover that strongly resists ethanol. This makes it compatible with food processors that spray ethanol-based cleaning fluids.



Upgrade 1

Reducing environmental burdens further

Up to 60% less power consumption

The **CX-400** series achieves reductions in power consumption of up to 60%, averaging 44% reduction when upgrading due to its unique design. These sensors reduce carbon emissions and contribute to environmental friendliness.

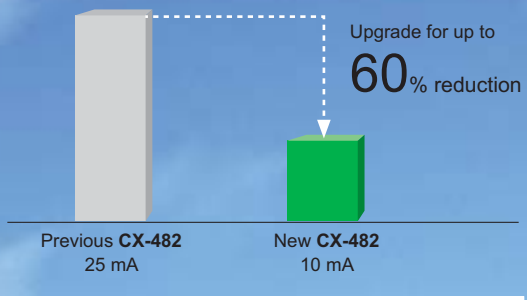

Contributing to reduced carbon dioxide emissions

Electricity consumed by the **CX-400** series has been reduced on average 10.5 mA. Calculating 8 hours/day, 260 days (operating 5 days/week) for a total of 2,080 hours/year leads to:

▶ The **CX-400** contributes **Approx. 84.6 t** annually in carbon dioxide reductions to the world

Upgrade 2

Stronger noise resistance

Stronger inverter countermeasures

The **CX-400** has a high noise resistance then its previons model. By incorporating an inverter countermeasure circuit that appropriately shifts with peak wavelength, the sensor now resists high-frequency noise from high-voltage inverter motors and inverter lights more effectively.

Upgrade 3

Stronger output short-circuit resistance

Stronger inverse wiring connection protection

Strengthening the output circuit inverse polarity protection prevents sensor damage caused by mistaken output or power supply wiring.

High Performance

High performance
For many applications



Thanks to its unique optics and specialized design, the **CX-400**'s electronic circuits allows for consistent sensing of minute 0.4 mm 0.016 in (the thickness of a business card) differences or 10 µm 0.394 mil ultra-thin film.

Save

Thoroughly eliminating unnecessary waste,
Reducing many environmental burdens



The **CX-400** series have three different cable length types and uses very simple packaging to reduce waste. The bag is made of polyethylene and does not emit toxic gasses.

Thru-beam type

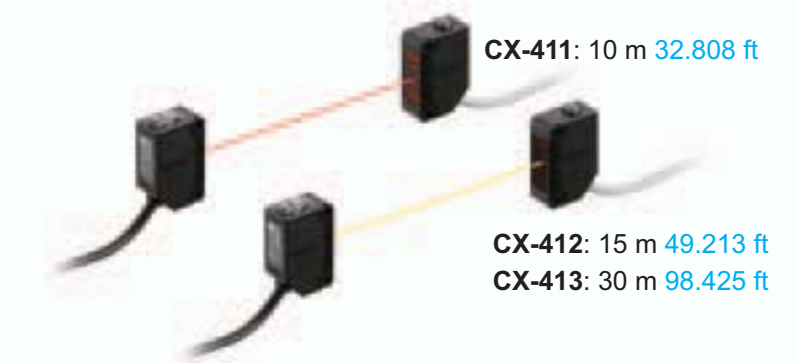

CX-411: 10 m 32.808 ft

CX-412: 15 m 49.213 ft
CX-413: 30 m 98.425 ft

Strong infrared beam
CX-412/413

Remarkable penetrating ability enables applications such as package content detection come into practice. (Note)

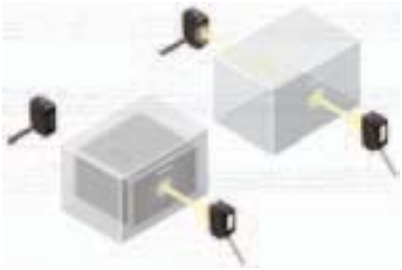

Note: When sensing utilizing penetrating power, make sure to verify using the actual sensor.

Strong in dust and dirt
CX-412/413

The infrared light source is strong in dust and dirt compared to the red beam type.

Even the thru-beam type is strong at mutual interference
CX-411

Two **CX-411** sensors, with their red beam light source, can be installed close together by inserting an interference prevention filter.

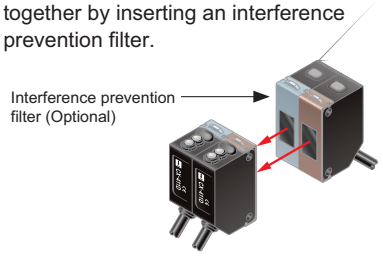

Applications

■ Detecting box collapsing within the rail of stacker crane



■ Synchronizing sensor for image processing systems

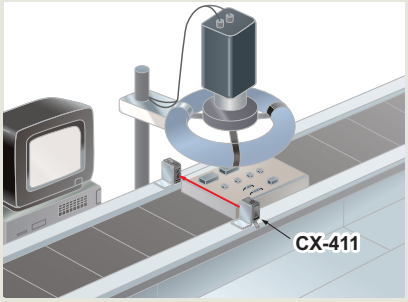

Retroreflective type

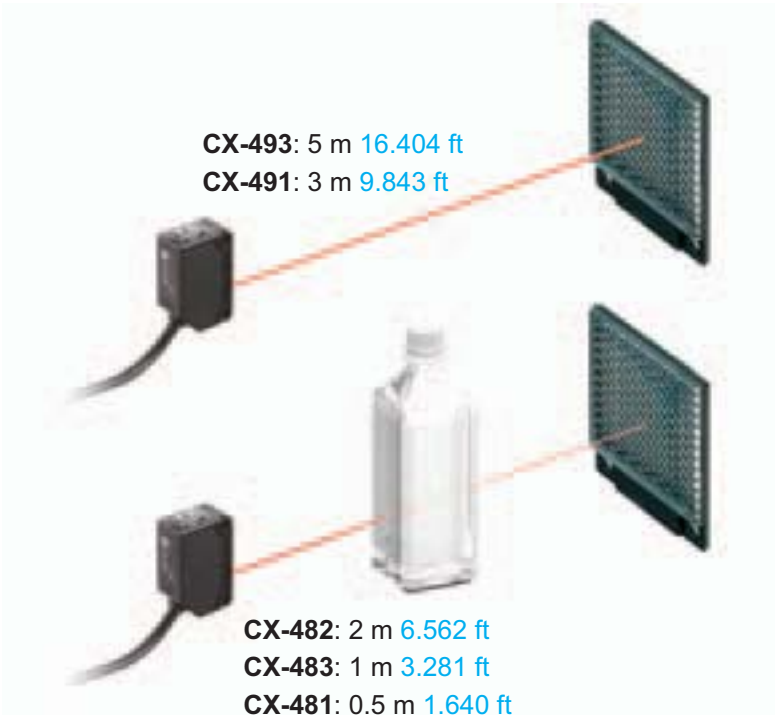

CX-493: 5 m 16.404 ft
CX-491: 3 m 9.843 ft

CX-482: 2 m 6.562 ft
CX-483: 1 m 3.281 ft
CX-481: 0.5 m 1.640 ft

For transparent object sensing

Long sensing range of 5 m 16.404 ft
CX-493

A long 5 m 16.404 ft sensing range is possible with the red LED type that is easy to align with the beam axis. The sensors can be used for wide automatic door shutters.



Retroreflective type with polarizing filters
CX-491

Built-in polarizing filters ensure stable sensing even on a mirror surface object.

Strong against extraneous light and noise
CX-491

Hardly affected by extraneous lights or noises, these sensors provide stable sensing.

Two sensors can be mounted close together
All models

The interference prevention function lets two sensors of any type to be mounted close together precisely.

Diffuse reflective type

CX-422: 800 mm 31.496 in
CX-421: 300 mm 11.811 in
CX-424: 100 mm 3.937 in

CX-423: 70 to 300 mm
2.756 to 11.811 in

Narrow-view type

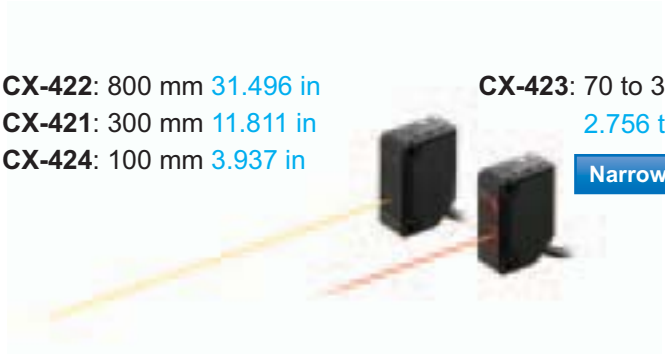

Beam axis alignment made easy with a high luminance spot beam

CX-423

These sensors have a high luminance red LED spot beam which provides bright visibility enabling the sensing position to be checked at a glance.
Because it achieved small beam spot approx. ø2 mm ø0.079 in at setting distance 100 mm 3.937 in, approx. ø5 mm ø0.197 in at setting distance 200 mm 7.874 in, even the minutest object can be accurately detected.

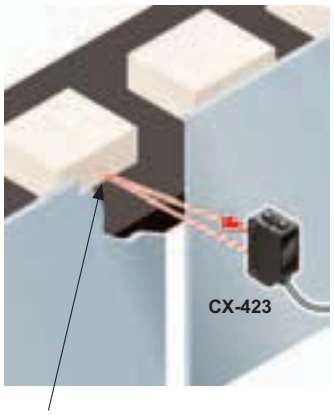

Great visibility approx. ø2 mm ø0.079 in high luminance spot beam (at setting distance 100 mm 3.937 in)

Reduction of volume adjustment labor

All models

Because these sensors possess many variations depending on the sensing range, they enable you to make optimal volume adjustment easily.

Applications

■ Detecting pins in the case

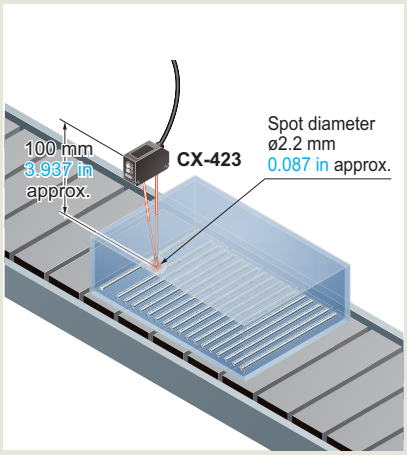

■ Passage confirmation on substrate conveyor equipment

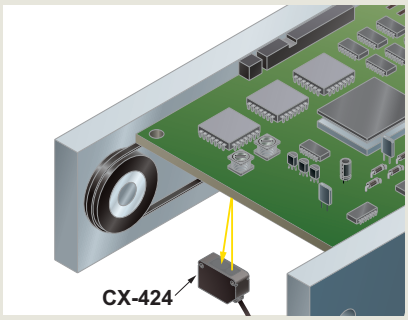

Introducing transparent object sensing type sensor

CX-48□

Our unique optical system and transparent object sensing circuit provide stable sensing of thinner transparent objects than the conventional models.

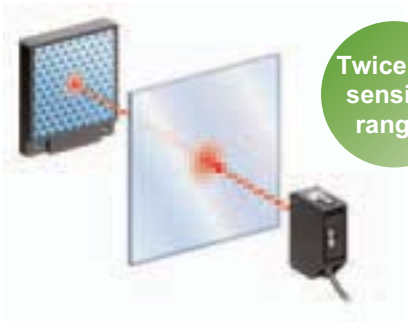

Transparent objects detectable with CX-48□ (Typical examples)

Sensing object	Sensing object size (mm in)	
Glass sheet	□50 □1.969	t=0.7 t=0.028
Cylindrical glass	ø50 ø1.969 ℓ=50 ℓ=1.969	t=1.3 t=0.051
Acrylic board	□50 □1.969	t=1.0 t=0.039
Styrol (Floppy case)	□50 □1.969	t=0.9 t=0.035
Food wrapping film	□50 □1.969	t=10 µm t=0.394 mil
Cigarette case film	□50 □1.969	t=20 µm t=0.787 mil
Vinyl bag	□50 □1.969	t=30 µm t=1.181 mil
Pet bottle (500mℓ)	ø66 ø2.598	

Reflector setting range **CX-481**: 300 to 500 mm 11.811 to 19.685 in
CX-482: 1 to 2 m 3.281 to 6.562 ft
CX-483: 500 to 1,000 mm 19.685 to 39.370 in
[with the **RF-230** reflector at the optimum condition (Note)]
Each object should pass across the beam at the center between the sensor and the reflector.
ℓ : Length of cylindrical glasses
t : Thickness of sensing object
Note: The optimum condition is defined as the condition in which the sensitivity level is set such that the stability indicator just lights up when the object is absent.

Applications

■ Detecting glossy electric appliances

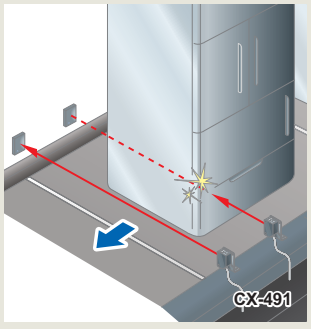

■ Detecting plastic bottles stacked on pallets



■ Passage confirmation of object on a conveyor belt

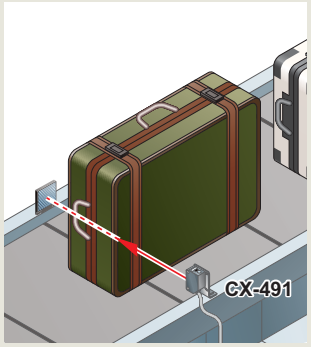

■ Detecting transparent film



Adjustable range reflective type

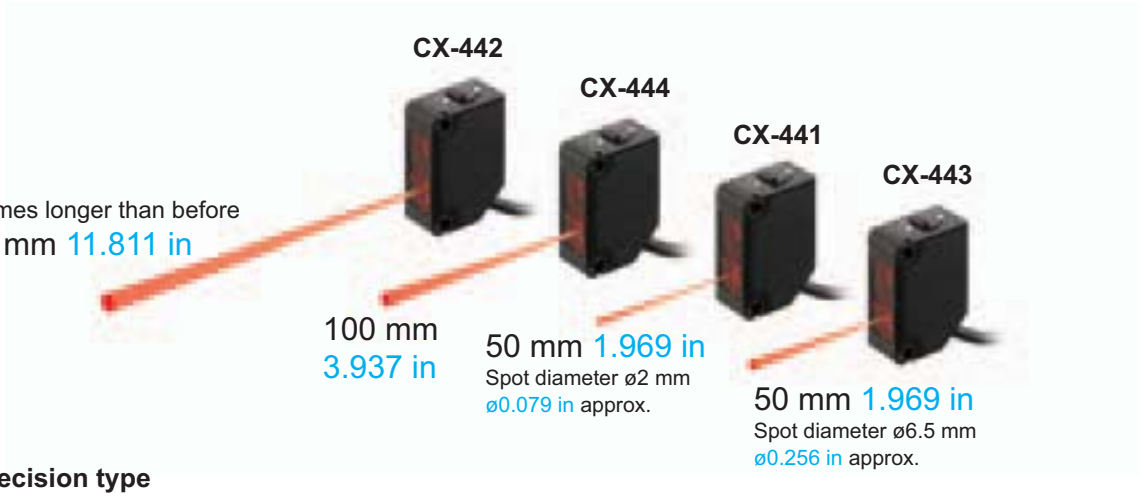

High precision type

CX-441/443

Can sense height differences as small as 0.4 mm 0.016 in, with hysteresis of 2 % or less

An advanced optical system provides sensing performance that is approx. 2.5 times than conventional models. Even ultra-small differences of 0.4 mm 0.016 in can be detected accurately.

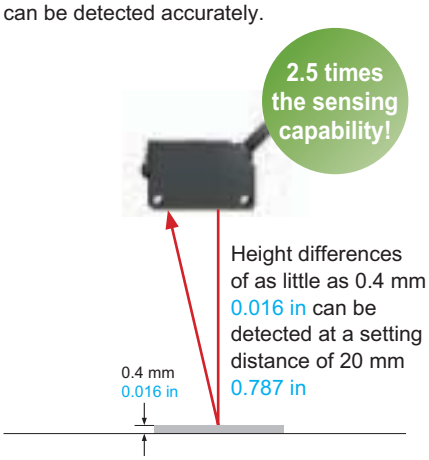

Hardly affected by colors

Both black and white objects can be sensed at the same distances. No adjuster control is needed, even when products of different colors are moving along the production line.

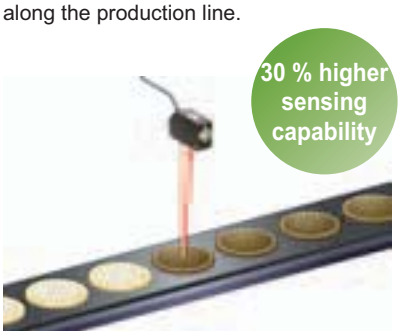

The difference in sensing range 1% or less between non-glossy white paper with a setting distance of 50 mm 1.969 in and non-glossy gray paper with a brightness level of 5.

Select from 2 spot diameters as per application

Within the choice of 50 mm 1.969 in sensing range sensors, we offer small spot type of approx. ø2 mm ø0.079 in optimal for detecting minute objects and large spot type of approx. ø6.5 mm ø0.256 in capable of sensing objects covered with holes and grooves.



CX-441
Spot diameter: ø2 mm ø0.079 in approx.
[Positioning]
Detects minute holes.

CX-443
Spot diameter: ø6.5 mm ø0.256 in approx.
[Detection of presence / absence of objects]
Ignores minute holes and accurately detects objects.

The bright spot makes beam axis alignment easy

All models

These sensors have a high luminance red spot that provides bright visibility. The sensing position can be checked at a glance. Because the **CX-441** sensor has a small spot beam, at approx. ø2 mm ø0.079 in, even the minutest object can be accurately detected.



Can be used for sensing minute differences

All models

Equipped with a 5-turn adjuster so that even challenging range settings can be handled with ease.

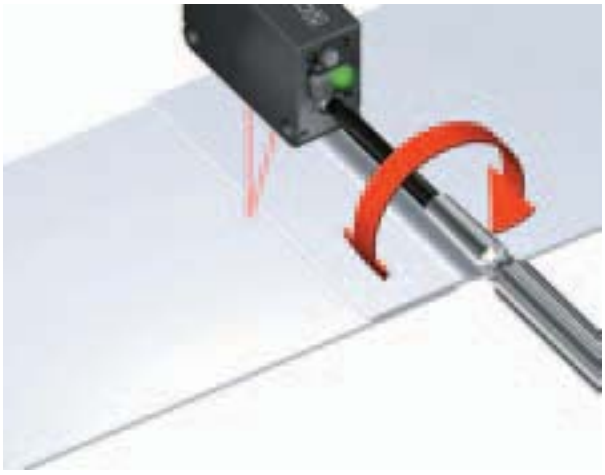

BGS / FGS functions make even the most challenging settings possible!

The BGS function is best suited for the following case

BGS **Background not present**

When object and background are separated



Not affected if the background color changes or someone passes behind the conveyor.





The FGS function is best suited for the following case

FGS **Background present**

When object and background are close together
When the object is glossy or uneven



Unaffected by gloss, color or uneven surfaces when sensing objects present on a conveyor belt.



Caution: Please use the FGS function together with a conveyor or other background unit.

BGS (Background suppression) function

The sensor judges that an object is present when light is received at position A of the light-receiving element (2-segment element). This is useful if the object and background are far apart. The distance adjustment method is the same as the conventional adjustment method for adjustable range reflective type sensors.

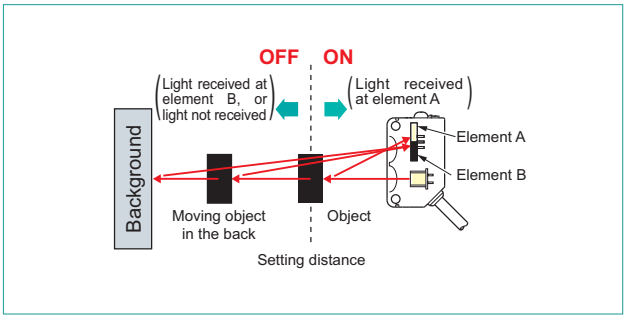

FGS (Foreground suppression) function

The sensor judges that an object is present when no light is received at position B of the light-receiving element (2-segment element). Accordingly, even objects that are glossy can be sensed. This is useful if the object and background are close together, or if the object being sensed is glossy.

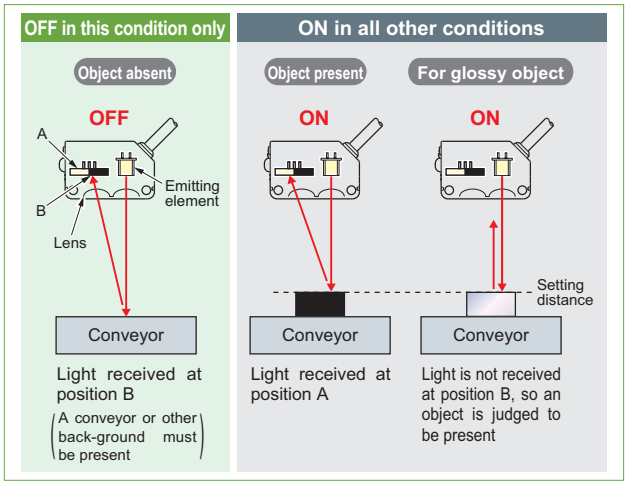

Applications

■ Small tablet detection

Detects minute objects unaffected by glossy background objects. Uses FGS function.



■ Biscuit detection

Stable sensing even for thin objects. Uses FGS function.



■ Passage confirmation

Not affected by color variations in objects and background objects. Uses BGS function.

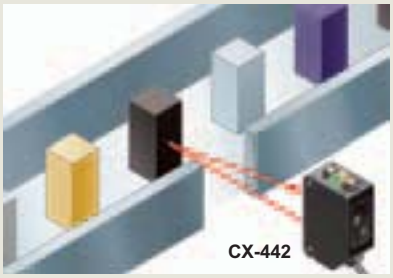

ORDER GUIDE

Standard type

Type	Appearance	Sensing range	Model No. (Note 1) NPN output	Model No. (Note 1) PNP output	Output operation	Emitting element
Thru-beam — Long sensing range		10 m 32.808 ft	CX-411	CX-411-P	Switchable either Light-ON or Dark-ON	Red LED
		15 m 49.213 ft	CX-412	CX-412-P		Infrared LED
		30 m 98.425 ft	NEW CX-413	NEW CX-413-P		
Retroreflective — With polarizing filters		3 m 9.843 ft (Note 2)	CX-491	CX-491-P		Red LED
Retroreflective — Long sensing range		5 m 16.404 ft (Note 2)	CX-493	CX-493-P		
Retroreflective — For transparent object sensing		50 to 500 mm 1.969 to 19.685 in (Note 2)	CX-481	CX-481-P		Infrared LED
		50 to 1,000mm 1.969 to 39.37 in (Note 2)	NEW CX-483	NEW CX-483-P		
		0.1 to 2 m 0.328 to 6.562 ft (Note 2)	CX-482	CX-482-P		
Diffuse reflective	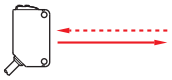	100 mm 3.937 in	CX-424	CX-424-P		Infrared LED
		300 mm 11.811 in	CX-421	CX-421-P		
		800 mm 31.496 in	CX-422	CX-422-P		
Diffuse reflective — Narrow-view	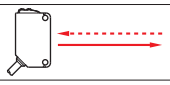	70 to 300 mm 2.756 to 11.811 in	CX-423	CX-423-P		Red LED
Adjustable range reflective — Small spot	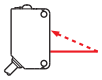	2 to 50 mm 0.079 to 1.969 in	CX-441	CX-441-P		Red LED
			CX-443	CX-443-P		
		15 to 100 mm 0.591 to 3.937 in	CX-444	CX-444-P		
		20 to 300 mm 0.787 to 11.811 in	CX-442	CX-442-P		

NOTE: Mounting bracket is not supplied with the sensor. Please select from the range of optional sensor mounting brackets.

Notes: 1) The model No. with "**E**" shown on the label affixed to the thru-beam type sensor is the emitter, "**D**" shown on the label is the receiver.
(e.g.) Emitter of **CX-411**: **CX-411E**, Receiver of **CX-411**: **CX-411D**
2) The sensing range of the retroreflective type sensor is specified for the **RF-230** reflector. The sensing range represents the actual sensing range of the sensor. The sensing ranges itemized in "A" of the table below may vary depending on the shape of sensing object. Be sure to check the operation with the actual sensing object.

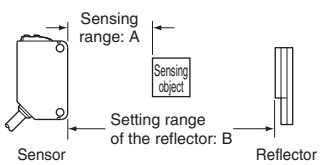

	CX-491□	CX-493□	CX-481□	CX-483□	CX-482□
A	0 to 3 m 0 to 9.843 ft	0 to 5 m 0 to 16.404 ft	50 to 500 mm 1.969 to 19.685 in	50 to 1,000 mm 1.969 to 39.37 in	0.1 to 2 m 0.328 to 6.562 ft
B	0.1 to 3 m 0.328 to 9.843 ft	0.1 to 5 m 0.328 to 16.404 ft	100 to 500 mm 3.937 to 19.685 in	100 to 1,000 mm 3.937 to 39.37 in	0.8 to 2 m 2.625 to 6.562 ft

ORDER GUIDE

NEW

Basic type (Without operation mode switch and sensitivity adjuster. Cable is 0.5 m 0.02 in long)

Type		Appearance	Sensing range	Model No.(Note 1) NPN output	Model No.(Note 1) PNP output	Output operation	Emitting element
Thru-beam			10 m 32.808 ft	**CX-411A-C05**	**CX-411A-P-C05**	Light-ON	Red LED
				CX-411B-C05	**CX-411B-P-C05**	Dark-ON	
	Long sensing range		15 m 49.213 ft	**CX-412A-C05**	**CX-412A-P-C05**	Light-ON	Infrared LED
				CX-412B-C05	**CX-412B-P-C05**	Dark-ON	
Retroreflective	With polarizing filters	 Optional (Note 2)	3 m 9.843 ft (Note 3)	**CX-491A-C05-Y**	**CX-491A-P-C05-Y**	Light-ON	Red LED
				CX-491B-C05-Y	**CX-491B-P-C05-Y**	Dark-ON	

NOTE: Mounting bracket is not supplied with the sensor. Please select from the range of optional sensor mounting brackets.

Notes: 1) The model No. with "**E**" shown on the label affixed to the thru-beam type sensor is the emitter, "**D**" shown on the label is the receiver.
(e.g.) Emitter of **CX-411A-C05**: **CX-411E**, Receiver of **CX-411A-C05**: **CX-411AD**
2) The reflector is sold separately.
3) The sensing range of the retroreflective type sensor is specified for the **RF-230** (optional) reflector. The sensing range represents the actual sensing range of the sensor. The sensing ranges itemized in "A" of the table below may vary depending on the shape of sensing object. Be sure to check the operation with the actual sensing object.

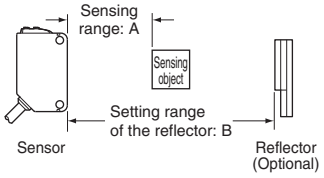

	CX-491□
A	0 to 3 m 0 to 9.843 ft
B	0.1 to 3 m 0.328 to 9.843 ft

ORDER GUIDE

0.5 m 1.640 ft / 5 m 16.4 ft cable length types

0.5 m 1.640 ft / 5 m 16.404 ft cable length types (standard: 2 m 6.562 ft, basic: 0.5 m 1.640 in) are also available.
When ordering this type, suffix "**-C05**" for the 0.5 m 1.640 ft cable length type, "**-C5**" for the 5 m 16.404 ft cable length type to the model No.
(Excluding **CX-44**□ and basic type.)
(e.g.) 0.5 m 1.640 ft cable length type of **CX-411-P** is "**CX-411-P-C05**"
5 m 16.404 ft cable length type of **CX-411-P** is "**CX-411-P-C5**"

M8 plug-in connector type, M12 pigtailed type

M8 plug-in connector type and M12 pigtailed type are also available.
When ordering this type, suffix "**-Z**" for the M8 connector type, "**-J**" for the M12 pigtailed type to the model No.
(Please note that M12 pigtailed type is not available for **CX-44**□. Excluding basic type.)
(e.g.) M8 connector type of **CX-411-P** is "**CX-411-P-Z**"
M12 pigtailed type of **CX-411-P** is "**CX-411-P-J**"

- **Mating cables (2 cables are required for the thru-beam type.)**

Type		Model No.	Cable length	Description
For M8 plug-in connector type	Straight	**CN-24A-C2**	2 m 6.562 ft	Can be used with all models
		CN-24A-C5	5 m 16.404 ft	
	Elbow	**CN-24AL-C2**	2 m 6.562 ft	
		CN-24AL-C5	5 m 16.404 ft	
For M12 pigtailed type	2-core	**CN-22-C2**	2 m 6.562 ft	For thru-beam type emitter (2-core)
		CN-22-C5	5 m 16.404 ft	
	4-core	**CN-24-C2**	2 m 6.562 ft	Can be used with all models
		CN-24-C5	5 m 16.404 ft	

Mating cables

- **CN-24A-C2**
  CN-24A-C5

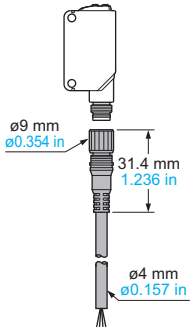

- **CN-24AL-C2**
  CN-24AL-C5

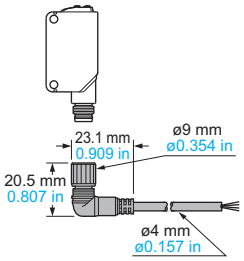

- **CN-22-C2**, **CN-22-C5**
  CN-24-C2, **CN-24-C5**

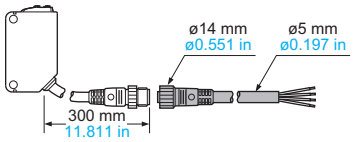

Package without reflector

NPN output type: **CX-491-Y**
PNP output type: **CX-491-P-Y**

Accessory

- **RF-230** (Reflector)



OPTIONS

Designation	Model No.		Slit size	Sensing range		Min. sensing object	
	Slit mask	Sensor		Slit on one side	Slit on both sides	Slit on one side	Slit on both sides
Round slit mask (For thru-beam type sensor only)	OS-CX-05	CX-411□	ø0.5 mm ø0.020 in	400 mm 15.748 in	20 mm 0.787 in	ø12 mm ø0.472 in	ø0.5 mm ø0.020 in
		CX-412□		600 mm 23.622 in	30 mm 1.181 in		
		CX-413□		1,200 mm 47.242 in	60 mm 2.362 in		
	OS-CX-1	CX-411□	ø1 mm ø0.039 in	900 mm 35.433 in	100 mm 3.937 in	ø12 mm ø0.472 in	ø1 mm ø0.039 in
		CX-412□		1.35 m 4.429 ft	150 mm 5.906 in		ø1.5 mm ø0.059 in
		CX-413□		2.7 m 8.857 ft	300 mm 11.811 in		
	OS-CX-2	CX-411□	ø2 mm ø0.079 in	2 m 6.562 ft	400 mm 15.748 in	ø12 mm ø0.472 in	ø2 mm ø0.079 in
		CX-412□		3 m 9.843 ft	600 mm 23.622 in		ø3 mm ø0.118 in
		CX-413□		6 m 19.685 ft	1,200 mm 47.242 in		
Rectangular slit mask (For thru-beam type sensor only)	OS-CX-05×6	CX-411□	0.5×6 mm 0.020×0.236 in	2 m 6.562 ft	400 mm 15.748 in	ø12 mm ø0.472 in	0.5×6 mm 0.020×0.236 in
		CX-412□		3 m 9.843 ft	600 mm 23.622 in		
		CX-413□		6 m 19.685 ft	1,200 mm 47.242 in		
	OS-CX-1×6	CX-411□	1×6 mm 0.039×0.236 in	3 m 9.843 ft	1 m 3.281 ft	ø12 mm ø0.472 in	1×6 mm 0.039×0.236 in
		CX-412□		4.5 m 14.764 ft	1.5 m 4.921 ft		
		CX-413□		9 m 29.528 ft	3 m 9.843 ft		
	OS-CX-2×6	CX-411□	2×6 mm 0.079×0.236 in	5 m 16.404 ft	2 m 6.562 ft	ø12 mm ø0.472 in	2×6 mm 0.079×0.236 in
		CX-412□		7.5 m 24.606 ft	3 m 9.843 ft		
		CX-413□		15 m 49.213 ft	6 m 19.685 ft		

Designation	Model No.		Sensing range	Min. sensing object
Interference prevention filter (For **CX-411□** only)	**PF-CX4-V** (Vertical, Silver) **2 pcs. per set**		5 m 16.404 ft (Note 1)	ø12 mm ø0.472 in (Note 1)
	PF-CX4-H (Horizonal, Light brown) **2 pcs. per set**			
Reflector (For retro-reflective type sensor only)	**RF-210**	**CX-491□**	1 m 3.281 ft (Note 2)	ø30 mm ø1.181 in
		CX-493□	1.5 m 4.921 ft (Note 2)	
		CX-481□	———	
		CX-483□	0.1 to 0.3 m 0.3288 to 0.984 ft (Note 2)	
		CX-482□	0.1 to 0.6 m 0.328 to 1.969 ft (Note 2)	
	RF-220	**CX-491□**	1.5 m 4.921 ft (Note 2)	ø35 mm ø1.378 in
		CX-493□	3 m 9.843 ft (Note 2)	
		CX-481□	50 to 300 mm 1.969 to 11.811 in (Note 2)	
		CX-483□	0.1 to 0.7 m 0.328 to 2.297 ft (Note 2)	
		CX-482□	0.1 to 1.3 m 0.328 to 4.265 ft (Note 2)	
	RF-230(Note 3)	**CX-491□-Y**	3 m 9.843 ft (Note 2)	ø50 mm ø1.969 in

Round slit mask

- **OS-CX-□**
  Fitted on the front face of the sensor with one-touch.

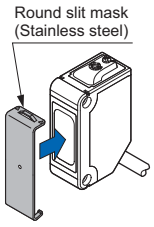

Rectangular slit mask

- **OS-CX-□×6**
  Fitted on the front face of the sensor with one-touch.

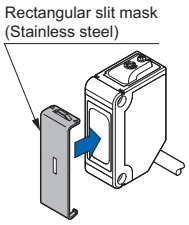

Interference prevention filter

- **PF-CX4-V**
  (Vertical, Silver)
- **PF-CX4-H**
  (Horizontal, Light brown)
  Two sets of **CX-411□** can be mounted close together.

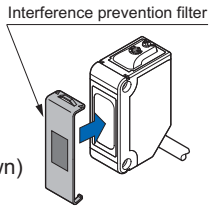

Notes: 1) Value when attached on both sides.
2) Set the distance between the **CX-491□/493□** and the reflector to 0.1 m 0.328 ft or more.
However, see the table below for **CX-48□**.
The sensing range "A" may vary depending on the shape of sensing object.
Be sure to check the operation with the actual sensing object.

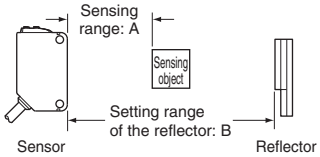

Model No.		A	B
Sensor	Reflector		
CX-481□	**RF-220**	50 to 300 mm 1.969 to 11.811 in	100 to 300 mm 3.937 to 11.811 in
CX-483□	**RF-220**	0.1 to 0.7 m 0.328 to 2.297 ft	0.2 to 0.7 m 0.656 to 2.297 ft
	RF-210	0.1 to 0.3 m 0.328 to 0.984 ft	0.1 to 0.3 m 0.328 to 0.984 ft
	RF-230	0.05 to 1 m 0.164 to 3.281 ft	0.1 to 1 m 0.328 to 3.281 ft
CX-482□	**RF-220**	0.1 to 1.3 m 0.328 to 4.265 ft	0.5 to 1.3 m 1.640 to 4.265 ft
	RF-210	0.1 to 0.6 m 0.328 to 1.969 ft	0.3 to 0.6 m 0.984 to 1.969 ft

Reflector

- **RF-210**

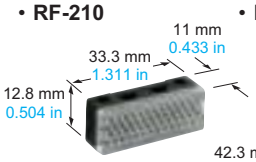

- **RF-220**

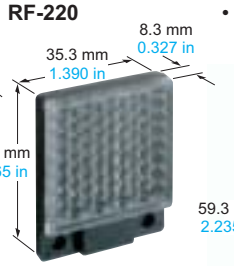

- **RF-230**

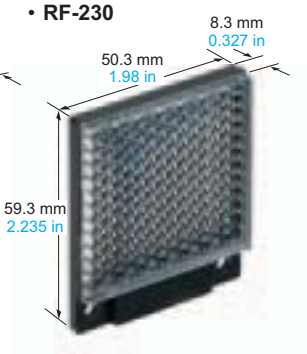

18/07/2011

3) **RF-230** is attached to the retroreflective type sensor other than the basic type.

OPTIONS

Designation	Model No.	Description	
Reflector mounting bracket	**MS-RF21-1**	Protective mounting bracket for **RF-210** It protects the reflector from damage and maintains alignment.	
	MS-RF22	For **RF-220**	
	MS-RF23	For **RF-230**	
Reflective tape	**RF-11**	• Sensing range (Note 4): 0.5 m 1.640 ft [**CX-491**□] 0.8 m 2.625 ft [**CX-493**□]	• Ambient temperature: -25 to +50 °C -13 to +122 °F • Ambient humidity: 35 to 85 % RH Notes: 1) Keep the tape free from stress. If it is pressed too much, its capability may deteriorate. 2) Do not cut the tape. It will deteriorate the sensing performance.
	RF-12	• Sensing range (Note 4): 0.7 m 2.297 ft [**CX-491**□] 1.2 m 3.937 ft [**CX-493**□] 0.1 to 0.6 m 0.328 to 1.969 ft [**CX-482**□]	
	RF-13	• Sensing range (Note 5): 0.5 m 1.640 ft [**CX-491**□]	• Ambient temperature: -25 to +55 °C -13 to +131 °F • Ambient humidity: 35 to 85 % RH
Sensor mounting bracket (Note 1)	**MS-CX2-1**	Foot angled mounting bracket It can also be used for mounting **RF-210**.	The thru-beam type sensor needs two brackets.
	MS-CX2-2	Foot biangled mounting bracket It can also be used for mounting **RF-210**.	
	MS-CX2-4	Protective mounting bracket	
	MS-CX2-5	Back biangled mounting bracket	
	MS-CX-3	Back angled mounting bracket	
Universal sensor mounting stand (Note 2)	**MS-AJ1**	Horizontal mounting type	Basic assembly
	MS-AJ2	Vertical mounting type	
	MS-AJ1-A	Horizontal mounting type	Lateral arm assembly
	MS-AJ2-A	Vertical mounting type	
	MS-AJ1-M	Horizontal mounting type	Assembly for reflector
	MS-AJ2-M	Vertical mounting type	
Sensor checker (Note 3)	**CHX-SC2**	It is useful for beam alignment of thru-beam type sensors. The optimum receiver position is given by indicators, as well as an audio signal.	

Notes: 1) The plug-in connector type sensor does not allow use of some sensor mounting brackets because of the protrusion of the connector.
2) Refer to the general catalog for details of the universal sensor mounting stand.
3) Refer to the general catalog for details of the sensor checker **CHX-SC2**.
4) Set the distance between the sensor and the reflective tape to 0.1 m 0.328 ft (**CX-482**□: 0.4 m 1.312 ft) or more.
5) Set the distance between the sensor and the reflective tape to 0.2 m 0.656 ft or more.

Universal sensor mounting stand

• **MS-AJ1**

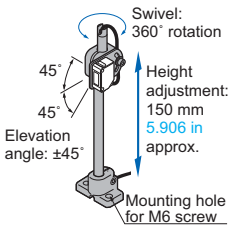

• **MS-AJ1-A**

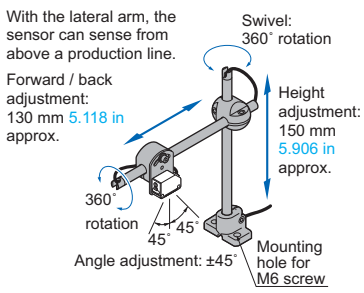

• **MS-AJ1-M**

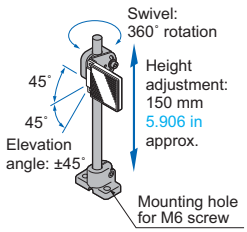

• **MS-AJ2**

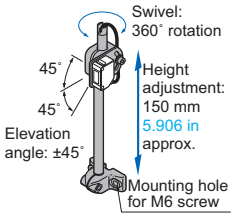

• **MS-AJ2-A**

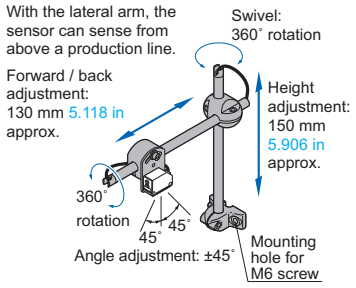

• **MS-AJ2-M**

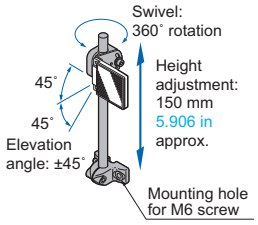

Reflector mounting bracket

• **MS-RF21-1**

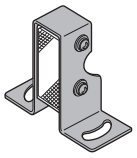

Two M3 (length 12 mm 0.472 in) screws with washers are attached.

• **MS-RF22**

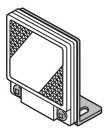

Two M3 (length 8 mm 0.315 in) screws with washers are attached.

• **MS-RF23**

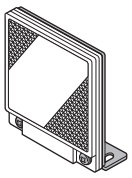

Two M4 (length 10 mm 0.394 in) screws with washers are attached.

Reflective tape

• **RF-11**

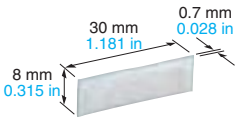

• **RF-12**

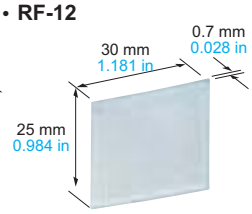

• **RF-13**

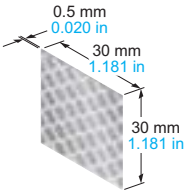

Sensor mounting bracket

• **MS-CX2-1**

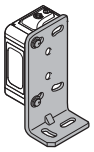

Two M3 (length 12 mm 0.472 in) screws with washers are attached.

• **MS-CX2-2**

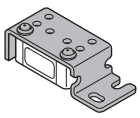

Two M3 (length 12 mm 0.472 in) screws with washers are attached.

• **MS-CX2-4**

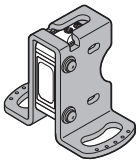

Two M3 (length 14 mm 0.551 in) screws with washers are attached.

• **MS-CX2-5**

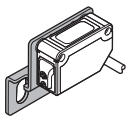

Two M3 (length 12 mm 0.472 in) screws with washers are attached.

• **MS-CX-3**

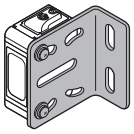

Two M3 (length 12 mm 0.472 in) screws with washers are attached.

Sensor checker

• **CHX-SC2**

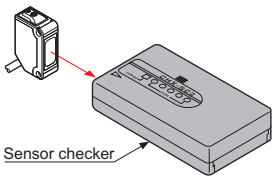

SPECIFICATIONS

Standard type

Item	Type	Thru-beam			Retroreflective					Diffuse reflective			
			Long sensing range		With polarizing filters	Long sensing range	For transparent object sensing						Narrow-view
Model No.	NPN output	CX-411	CX-412	CX-413	CX-491	CX-493	CX-481	CX-483	CX-482	CX-424	CX-421	CX-422	CX-423
	PNP output	CX-411-P	CX-412-P	CX-413-P	CX-491-P	CX-493-P	CX-481-P	CX-483-P	CX-482-P	CX-424-P	CX-421-P	CX-422-P	CX-423-P
Sensing range		10 m 32.808 ft	15 m 49.213 ft	30m 98.425 ft	3 m 9.843 ft (Note 2)	5 m 16.404 ft (Note 2)	50 to 500 mm 1.969 to 19.685 in (Note 2)	50 to 1,000mm 1.969 to 39.37 in (Note 2)	0.1 to 2 m 0.328 to 6.562 ft (Note 2)	100 mm 3.937 in (Note 3)	300 mm 11.811 in (Note 3)	800 mm 31.496 in (Note 3)	70 to 200 mm 2.756 to 7.874 in (Note 3)
Sensing object		ø12 mm ø0.472 in or more opaque object (Note 4)			ø50 mm ø1.969 in or more opaque, translucent or specular object (Note 2, 5)	ø50 mm ø1.969 in or more opaque or translucent object (Note 2, 5)	ø50 mm ø1.969 in or more transparent, translucent or opaque object (Note 2, 5)			Opaque, translucent or transparent object (Note 5)			Opaque, translucent or transparent object (Note 5) (Min. sensing object: ø0.5 mm ø0.020 in copper wire)
Hysteresis		———								15 % or less of operation distance (Note 3)			
Repeatability (perpendicular to sensing axis)		0.5 mm 0.020 in or less								1 mm 0.039 in or less			0.5 mm 0.020 in or less
Supply voltage		12 to 24 V DC ±10 % Ripple P-P 10 % or less											
Current consumption		Emitter: 15 mA or less Receiver: 10 mA or less	Emitter: 20 mA or less Receiver: 10 mA or less	Emitter: 25 mA or less Receiver: 10 mA or less	13 mA or less	10 mA or less				13 mA or less		15 mA or less	
Output		<NPN output type> NPN open-collector transistor • Maximum sink current: 100 mA • Applied voltage: 30 V DC or less (between output and 0 V) • Residual voltage: 2 V or less (at 100 mA sink current) 1 V or less (at 16 mA sink current)					<PNP output type> PNP open-collector transistor • Maximum source current: 100 mA • Applied voltage: 30 V DC or less (between output and +V) • Residual voltage: 2 V or less (at 100 mA source current) 1 V or less (at 16 mA source current)						
	Output operation	Switchable either Light-ON or Dark-ON											
	Short-circuit protection	Incorporated											
Response time		1 ms or less		2 ms or less	1 ms or less								
Operation indicator		Orange LED (lights up when the output is ON)(incorporated on the receiver for thru-beam type)											
Stability indicator		Green LED (lights up under stable light received condition or stable dark condition)(incorporated on the receiver for thru-beam type)											
Power indicator		Green LED (lights up when the power is ON) (incorporated on the emitter)			———								
Sensitivity adjuster		Continuously variable adjuster (incorporated on the receiver for thru-beam type)											
Automatic interference prevention function		Two units of sensors can be mounted close together with interference prevention filters. (Sensing range: 5 m 16.404 ft)	———		Incorporated (Two units of sensors can be mounted close together.)								
Environmental resistance	Protection	IP67 (IEC)											
	Ambient temperature	-25 to +55 °C -13 to +131 °F (No dew condensation or icing allowed), Storage: -30 to +70 °C -22 to +158 °F											
	Ambient humidity	35 to 85 % RH, Storage: 35 to 85 % RH											
	Ambient illuminance	Incandescent light: 3,000 ℓx at the light-receiving face											
	Voltage withstandability	1,000 V AC for one min. between all supply terminals connected together and enclosure											
	Insulation resistance	20 MΩ, or more, with 250 V DC megger between all supply terminals connected together and enclosure											
	Vibration resistance	10 to 500 Hz frequency, 1.5 mm 0.059 in double amplitude (10 G max.) in X, Y and Z directions for two hours each											
	Shock resistance	500 m/s² acceleration (50 G approx.) in X, Y and Z directions for three times each											
Emitting element (modulated)		Red LED	Infrared LED		Red LED		Infrared LED			Infrared LED			Red LED
	Peak emission wavelength	680 nm 0.027 mil	870 nm 0.034 mil	850 nm 0.033 mil	680 nm 0.027 mil	650 nm 0.026 mil	870 nm 0.034 mil			860 nm 0.033 mil			645 nm 0.025 mil
Material		Enclosure: PBT (Polybutylene terephthalate), Lens: Acrylic (**CX-48**□: Polycarbonate), Indicator cover: Acrylic (**CX-48**□: Polycarbonate)											
Cable		0.2 mm² 3-core (thru-beam type emitter: 2-core) cabtyre cable, 2 m 6.562 ft long											
Cable extension		Extension up to total 100 m 328.084 ft is possible with 0.3 mm², or more, cable (thru-beam type: both emitter and receiver)											
Weight	Net	Emitter: 45 g approx., Receiver: 50 g approx.			50 g approx.								
	Gross	100 g approx.			80 g approx.					60 g approx.			
Accessories		———			**RF-230** (Reflector): 1 pc.					———			

Notes: 1) Where measurement conditions have not been specified precisely, the conditions used were an ambient temperature of +23 °C +73.4 °F.
2) The sensing range and the sensing object of the retroreflective type sensor are specified for the **RF-230** reflector. The sensing range represents the actual sensing range of the sensor. The sensing ranges itemized in "A" of the table below may vary depending on the shape of sensing object. Be sure to check the operation with the actual sensing object.

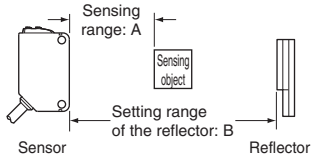

	CX-491□	CX-493□	CX-481□	CX-483□	CX-482□
A	0 to 3 m 0 to 9.843 ft	0 to 5 m 0 to 16.404 ft	50 to 500 mm 1.969 to 19.685 in	50 to 1,000 mm 1.969 to 39.37 in	0.1 to 2 m 0.328 to 6.562 ft
B	0.1 to 3 m 0.328 to 9.843 ft	0.1 to 5 m 0.328 to 16.404 ft	100 to 500 mm 3.937 to 19.685 in	100 to 1,000 mm 3.937 to 39.37 in	0.8 to 2 m 2.625 to 6.562 ft

3) The sensing range and hysteresis of the diffuse reflective type sensor are specified for white non-glossy paper (200 × 200 mm 7.874 × 7.874 in) as the object.
4) If slit masks (optional) are fitted, an object of ø0.5 mm ø0.020 in (using round slit mask) can be detected.
5) Make sure to confirm detection with an actual sensor before use.

SPECIFICATIONS

Standard type

Item \ Type		Small spot	Adjustable range reflective		
Model No.	NPN output	**CX-441**	**CX-443**	**CX-444**	**CX-442**
	PNP output	**CX-441-P**	**CX-443-P**	**CX-444-P**	**CX-442-P**
Adjustable range (Note 2)		20 to 50 mm 0.787 to 1.969 in		20 to 100 mm 0.787 to 3.937 in	40 to 300 mm 1.575 to 11.811 in
Sensing range (with white non-glossy paper)		2 to 50 mm 0.079 to 1.969 in		15 to 100 mm 0.591 to 3.937 in	20 to 300 mm 0.787 to 11.811 in
Hysteresis (with white non-glossy paper)		2 % or less of operation distance			5 % or less of operation distance
Repeatability		Along sensing axis: 1 mm 0.039 in or less, Perpendicular to sensing axis: 0.2 mm 0.008 in or less (with white non-glossy paper)			
Supply voltage		12 to 24 V DC ±10 % Ripple P-P 10 % or less			
Current consumption		25 mA or less			
Output		<NPN output type> NPN open-collector transistor • Maximum sink current: 100 mA • Applied voltage: 30 V DC or less (between output and 0 V) • Residual voltage: 2 V or less (at 100 mA sink current) 1 V or less (at 16 mA sink current)		<PNP output type> PNP open-collector transistor • Maximum source current: 100 mA • Applied voltage: 30 V DC or less (between output and +V) • Residual voltage: 2 V or less (at 100 mA source current) 1 V or less (at 16 mA source current)	
	Output operation	Switchable either Detection-ON or Detection-OFF			
	Short-circuit protection	Incorporated			
Response time		1 ms or less			
Operation indicator		Orange LED (lights up when the output is ON)			
Stability indicator		Green LED (lights up under stable operating condition) (Note 3)			
Distance adjuster		5-turn mechanical adjuster			
Sensing mode		BGS / FGS functions Switchable with wiring of sensing mode selection input			
Automatic interference prevention function (Note 4)		Incorporated			
Environmental resistance	Protection	IP67 (IEC)			
	Ambient temperature	-25 to +55 °C -13 to +131 °F (No dew condensation or icing allowed), Storage: -30 to +70 °C -22 to +158 °F			
	Ambient humidity	35 to 85 % RH, Storage: 35 to 85 % RH			
	Ambient illuminance	Incandescent light: 3,000 ℓx at the light-receiving face			
	Voltage withstandability	1,000 V AC for one min. between all supply terminals connected together and enclosure			
	Insulation resistance	20 MΩ, or more, with 250 V DC megger between all supply terminals connected together and enclosure			
	Vibration resistance	10 to 500 Hz frequency, 3 mm 0.118 in double amplitude in X, Y and Z directions for two hours each			
	Shock resistance	500 m/s² acceleration (50 G approx.) in X, Y and Z directions for three times each			
Emitting element		Red LED (Peak emission wavelength: 650 mm 25.591 in, modulated)			
Spot diameter		ø2 mm ø0.079 in approx. (at 50 mm 1.969 in distance)	ø6.5 mm ø0.256 in approx. (at 50 mm 1.969 in distance)	ø9 mm ø0.354 in approx. (at 100 mm 3.937 in distance)	□15 mm □0.591 in approx. (at 300 mm 11.811 in distance)
Material		Enclosure: PBT (Polybutylene terephthalate), Lens: Polycarbonate, Indicator cover: Polycarbonate			
Cable		0.2 mm² 4-core cabtyre cable, 2 m 6.562 ft long			
Cable extension		Extension up to total 100 m 328.084 ft is possible with 0.3 mm², or more, cable.			
Weight		Net weight: 55 g approx., Gross weight: 65 g approx.			

Notes: 1) Where measurement conditions have not been specified precisely, the conditions used were an ambient temperature of +23 °C +73.4 °F.
2) The adjustable range stands for the maximum sensing range which can be set with the distance adjuster. The sensor can detect an object 2 mm 0.079 in [**CX-444**(**-P**): 15 mm 0.591 in, **CX-442**(**-P**): 20 mm 0.787 in], or more, away.

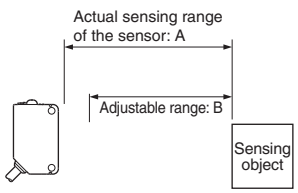

	CX-441□/443□	CX-444□	CX-442□
A	2 to 50 mm 0.079 to 1.969 in	15 to 100 mm 0.591 to 3.937 in	20 to 300 mm 0.787 to 11.811 in
B	20 to 50 mm 0.787 to 1.969 in	20 to 100 mm 0.787 to 3.937 in	40 to 300 mm 1.575 to 11.811 in

3) Refer to the manual or the general catalog for operation of the stability indicator.
4) Note that detection may be unstable depending on the mounting conditions or the sensing object. In the state that this product is mounted, be sure to check the operation with the actual sensing object.

SPECIFICATIONS

Basic type

Item	Type	Thru-beam				Retroreflective	
				Long sensing range		With polarizing filters	
		Light-ON	Dark-ON	Light-ON	Dark-ON	Light-ON	Dark-ON
Model No.	NPN output	**CX-411A-C05**	**CX-411B-C05**	**CX-412A-C05**	**CX-412B-C05**	**CX-491A-C05-Y**	**CX-491B-C05-Y**
	PNP output	**CX-411A-P-C05**	**CX-411B-P-C05**	**CX-412A-P-C05**	**CX-412B-P-C05**	**CX-491A-P-C05-Y**	**CX-491B-P-C05-Y**
Sensing range		10 m 32.808 ft		15 m 49.213 ft		3 m 9.843 ft (Note 2)	
Sensing object		ø12 mm ø0.472 in or more opaque object (Note 3)				ø50 mm ø1.969 in or more transparent, translucent or opaque object (Note 2, 4)	
Hysteresis		———					
Repeatability (perpendicular to sensing axis)		0.5 mm 0.020 in or less					
Supply voltage		12 to 24 V DC ±10 % Ripple P-P 10 % or less					
Current consumption		Emitter: 15 mA or less Receiver: 10 mA or less		Emitter: 20 mA or less Receiver: 10 mA or less		13 mA or less	
Output		<NPN output type> NPN open-collector transistor • Maximum sink current: 100 mA • Applied voltage: 30 V DC or less (between output and 0 V) • Residual voltage: 2 V or less (at 100 mA sink current) 1 V or less (at 16 mA sink current)		<PNP output type> PNP open-collector transistor • Maximum source current: 100 mA • Applied voltage: 30 V DC or less (between output and +V) • Residual voltage: 2 V or less (at 100 mA source current) 1 V or less (at 16 mA source current)			
	Short-circuit protection	Incorporated					
Response time		1 ms or less					
Operation indicator		Orange LED (lights up when the output is ON)(incorporated on the receiver for thru-beam type)					
Stability indicator		Green LED (lights up under stable light received condition or stable dark condition)(incorporated on the receiver for thru-beam type)					
Power indicator		Green LED (lights up when the power is ON) (incorporated on the emitter)				———	
Sensitivity adjuster		———					
Automatic interference prevention function		[Two units of sensors can be mounted close together with interference prevention filters. (Sensing range: 5 m 16.404 ft)]		———		Incorporated (Two units of sensors can be mounted close together.)	
Environmental resistance	Protection	IP67 (IEC)					
	Ambient temperature	-25 to +55 °C -13 to +131 °F (No dew condensation or icing allowed), Storage: -30 to +70 °C -22 to +158 °F					
	Ambient humidity	35 to 85 % RH, Storage: 35 to 85 % RH					
	Ambient illuminance	Incandescent light: 3,000 ℓx at the light-receiving face					
	Voltage withstandability	1,000 V AC for one min. between all supply terminals connected together and enclosure					
	Insulation resistance	20 MΩ, or more, with 250 V DC megger between all supply terminals connected together and enclosure					
	Vibration resistance	10 to 500 Hz frequency, 1.5 mm 0.059 in double amplitude (10 G max.) in X, Y and Z directions for two hours each					
	Shock resistance	500 m/s² acceleration (50 G approx.) in X, Y and Z directions for three times each					
Emitting element (modulated)		Red LED		Infrared LED		Red LED	
	Peak emission wavelength	680 nm 0.027 mil		870 nm 0.034 mil		680 nm 0.027 mil	
Material		Enclosure: PBT (Polybutylene terephthalate), Lens: Acrylic, Indicator cover: Acrylic					
Cable		0.2 mm² 3-core (thru-beam type emitter: 2-core) cabtyre cable, 0.5 m 1.640 ft long					
Cable extension		Extension up to total 100 m 328.084 ft is possible with 0.3 mm², or more, cable (thru-beam type: both emitter and receiver)					
Weight	Net	Emitter: 20 g approx., Receiver: 20 g approx.				20 g approx.	
	Gross	50 g approx.				30 g approx.	

Notes: 1) Where measurement conditions have not been specified precisely, the conditions used were an ambient temperature of +23 °C +73.4 °F.

2) The sensing range and the sensing object of the retroreflective type sensor are specified for the **RF-230** reflector (optional). The sensing range represents the actual sensing range of the sensor. The sensing ranges itemized in "A" of the table below may vary depending on the shape of sensing object. Be sure to check the operation with the actual sensing object.

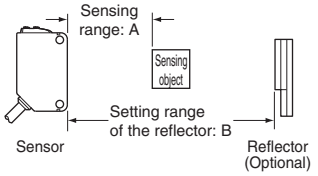

	CX-491□
A	0 to 3 m 0 to 9.843 ft
B	0.1 to 3 m 0.328 to 9.843 ft

3) If slit masks (optional) are fitted, an object of ø0.5 mm ø0.020 in (using round slit mask) can be detected.

4) Make sure to confirm detection with an actual sensor before use.

I/O CIRCUIT AND WIRING DIAGRAMS

NPN output type

I/O circuit diagram

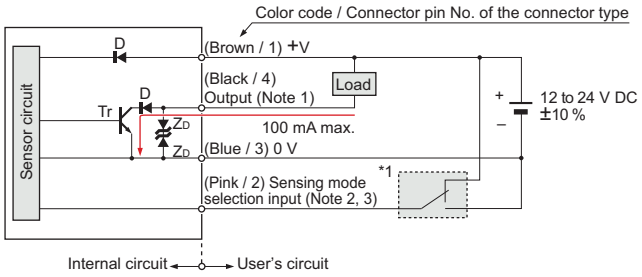

Notes: 1) The emitter of the thru-beam type sensor does not incorporate the output.
2) Sensing mode selection input is incorporated only for the **CX-44**□ adjustable range reflective type. When using the **CX-44**□, be sure to wire the sensing mode selection input (pink / 2) as mentioned *1. Unstable operation may occur.
3) When the mating cable is connected to the plug-in connector type of **CX-44**□, its color is white.

*1

- Sensing mode selection input
  BGS function: Connect to 0 V
  FGS function: Connect to +V

Symbols ... D : Reverse supply polarity protection diode
ZD : Surge absorption zener diode
Tr : NPN output transistor

Wiring diagram

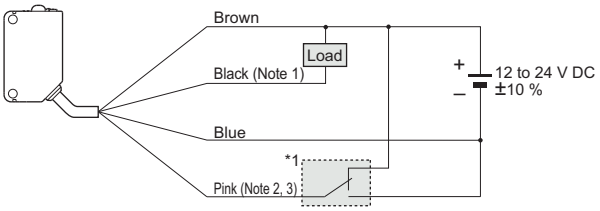

Notes: 1) The emitter of the thru-beam type sensor does not incorporate the black wire.
2) The pink wire is incorporated only for the **CX-44**□ adjustable range reflective type. When using the **CX-44**□, be sure to wire the pink wire as mentioned *1. Unstable operation may occur.
3) When the mating cable is connected to the plug-in connector type of **CX-44**□, its color is white.

*1

- Sensing mode selection input
  BGS function: Connect to 0 V
  FGS function: Connect to +V

Connector pin position

M8 plug-in connector type

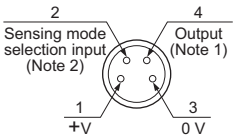

M12 pigtailed type

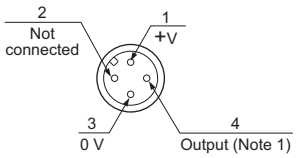

Notes: 1) The emitter of the thru-beam type sensor does not incorporate the output.
2) Sensing mode selection input is incorporated only for the **CX-44**□ adjustable range reflective type. When using the **CX-44**□, be sure to wire the sensing mode selection input (pink / 2). Unstable operation may occur.

PNP output type

I/O circuit diagram

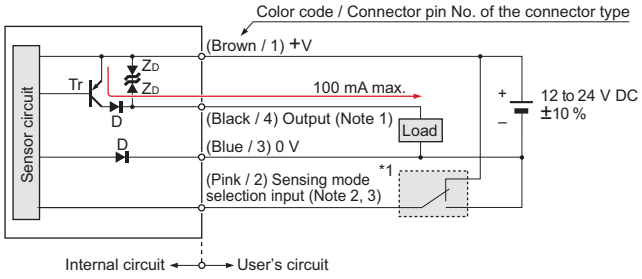

Notes: 1) The emitter of the thru-beam type sensor does not incorporate the output.
2) Sensing mode selection input is incorporated only for the **CX-44**□**-P** adjustable range reflective type. When using the **CX-44**□**-P**, be sure to wire the sensing mode selection input (pink / 2) as mentioned *1. Unstable operation may occur.
3) When the mating cable is connected to the plug-in connector type of **CX-44**□**-P**, its color is white.

*1

- Sensing mode selection input
  BGS function: Connect to 0 V
  FGS function: Connect to +V

Symbols ... D : Reverse supply polarity protection diode
ZD : Surge absorption zener diode
Tr : PNP output transistor

Wiring diagram

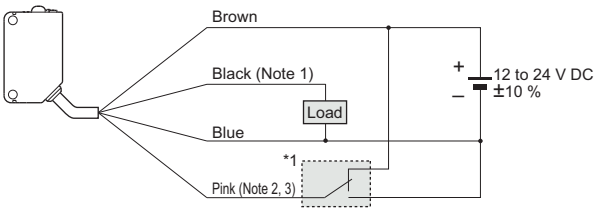

Notes: 1) The emitter of the thru-beam type sensor does not incorporate the black wire.
2) The pink wire is incorporated only for the **CX-44**□**-P** adjustable range reflective type. When using the **CX-44**□**-P**, be sure to wire the pink wire as mentioned *1. Unstable operation may occur.
3) When the mating cable is connected to the plug-in connector type of **CX-44**□**-P**, its color is white.

*1

- Sensing mode selection input
  BGS function: Connect to 0 V
  FGS function: Connect to +V

Connector pin position

M8 plug-in connector type

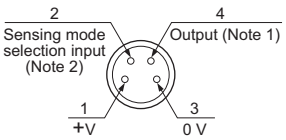

M12 pigtailed type

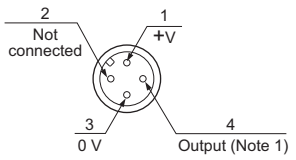

Notes: 1) The emitter of the thru-beam type sensor does not incorporate the output.
2) Sensing mode selection input is incorporated only for the **CX-44**□**-P** adjustable range reflective type. When using the **CX-44**□**-P**, be sure to wire the sensing mode selection input (pink / 2). Unstable operation may occur.

PRECAUTIONS FOR PROPER USE

- Never use this product as a sensing device for personnel protection.
- In case of using sensing devices for personnel protection, use products which meet laws and standards, such as OSHA, ANSI or IEC etc., for personnel protection applicable in each region or country.

Mounting

- The tightening torque should be 0.5 N·m or less.

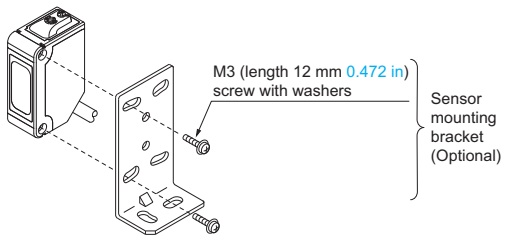

Wiring

- Make sure that the power supply is off while wiring.
- Take care that wrong wiring will damage the sensor.
- Verify that the supply voltage variation is within the rating.
- If power is supplied from a commercial switching regulator, ensure that the frame ground (F.G.) terminal of the power supply is connected to an actual ground.
- In case noise generating equipment (switching regulator, inverter motor, etc.) is used in the vicinity of this product, connect the frame ground (F.G.) terminal of the equipment to an actual ground.
- Do not run the wires together with high-voltage lines or power lines or put them in the same raceway. This can cause malfunction due to induction.
- Extension up to total 100 m 328.084 ft (thru-beam type: both emitter and receiver) is possible with 0.3 mm^2, or more, cable. However, in order to reduce noise, make the wiring as short as possible.
- Make sure that stress by forcible bend or pulling is not applied directly to the sensor cable joint.

Others

- This product has been developed / produced for industrial use only.
- Do not use during the initial transient time (50 ms) after the power supply is switched on.
- Take care that the sensor is not directly exposed to fluorescent light from a rapid-starter lamp or a high frequency lighting device, as it may affect the sensing performance.
- This sensor is suitable for indoor use only.
- Do not use this sensor in places having excessive vapor, dust, etc., or where it may come in direct contact with water or corrosive gas.
- Take care that the sensor does not come in direct contact with water, oil, grease or organic solvents, such as, thinner, etc.
- This sensor cannot be used in an environment containing inflammable or explosive gases.
- Never disassemble or modify the sensor.

DIMENSIONS (Unit: mm in)

The CAD data in the dimensions can be downloaded from the website: panasonic-electric-works.net/sunx

CX-41□ Sensor

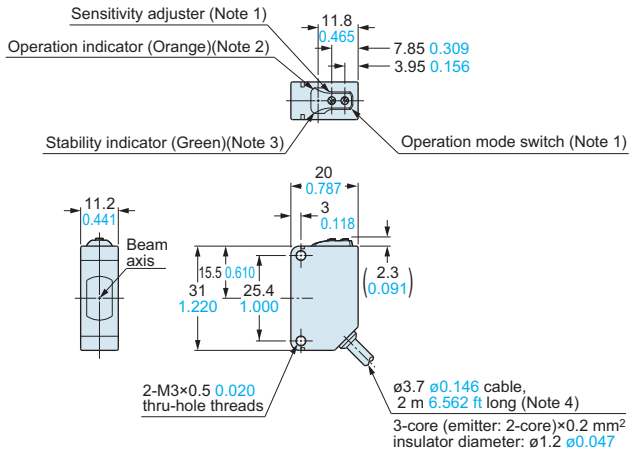

Notes: 1) Not incorporated on the emitter and the basic type sensor.
2) It is the power indicator (green) on the emitter.
3) Not incorporated on the emitter.
4) Basic type: 0.5 m 1.640 ft long.

CX-41□-Z Sensor

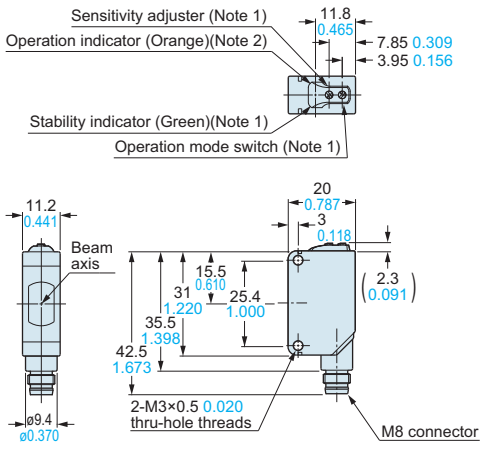

Notes: 1) Not incorporated on the emitter.
2) It is the power indicator (green) on the emitter.

CX-41□-J Sensor

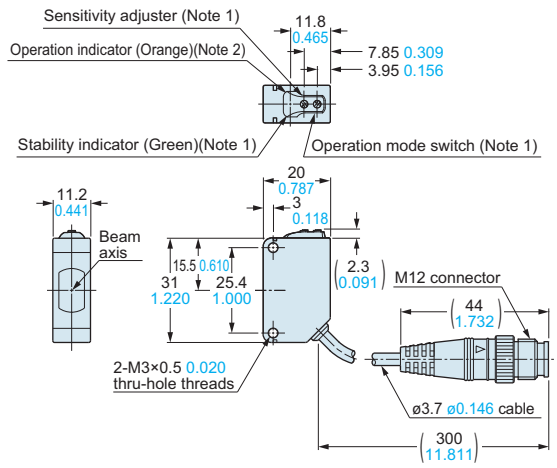

Notes: 1) Not incorporated on the emitter.
2) It is the power indicator (green) on the emitter.

CX-49□ CX-48□ CX-42□ Sensor

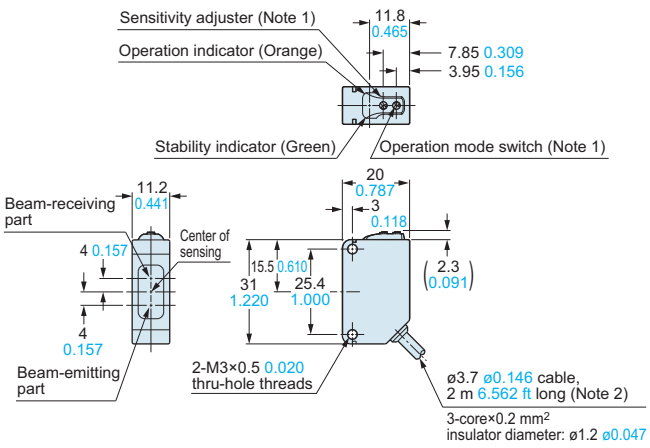

Notes: 1) Not incorporated on the Bacic type sensors.
2) Basic type: 0.5 m 1.640 ft long.

CX-49□-Z CX-48□-Z CX-42□-Z Sensor

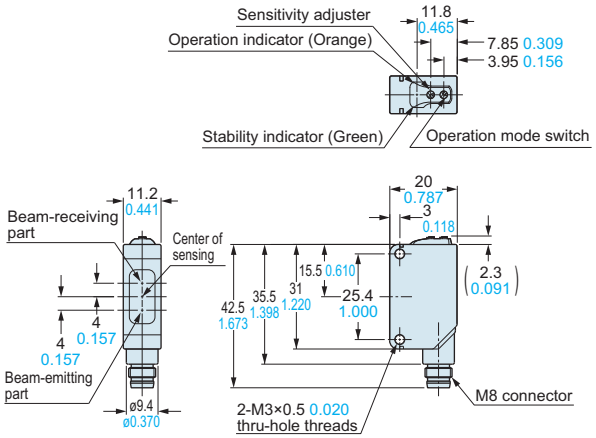

CX-49□-J CX-48□-J CX-42□-J Sensor

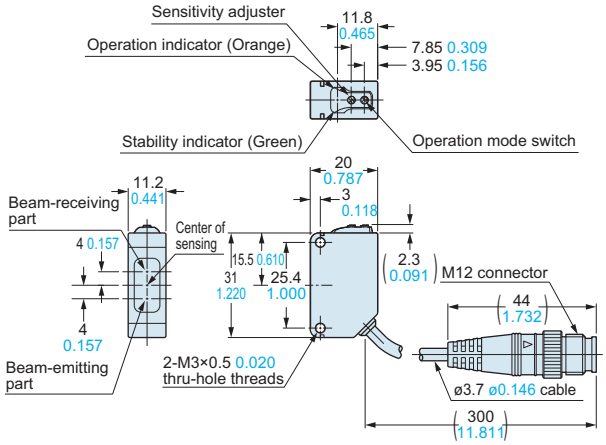

CX-44□ Sensor

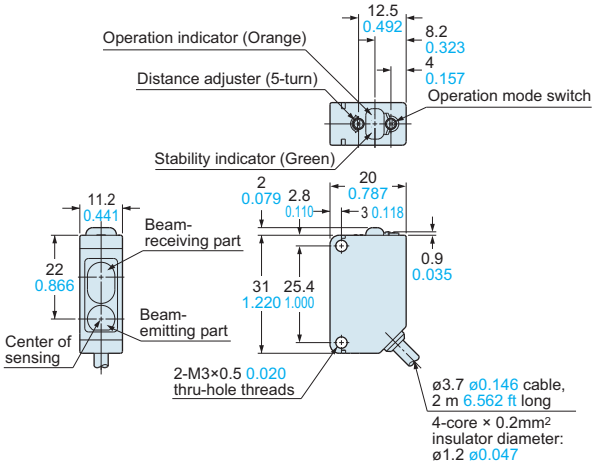

CX-44□-Z Sensor

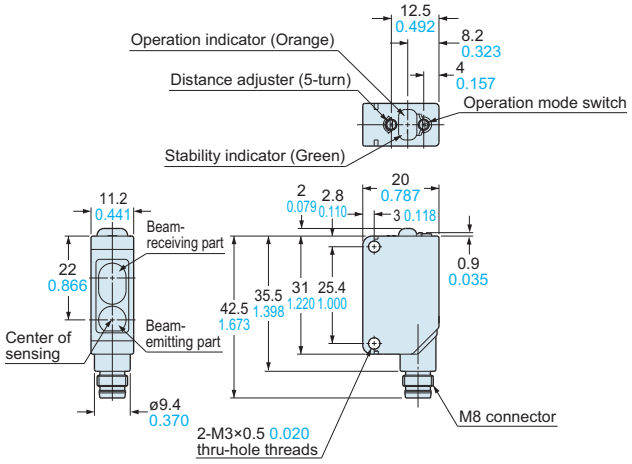

DIMENSIONS (Unit: mm in)

The CAD data in the dimensions can be downloaded from the website:
panasonic-electric-works.net/sunx

RF-230 Reflector (Accessory for the retroreflective type sensor)

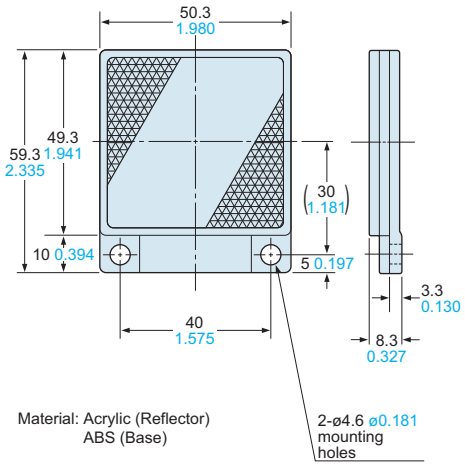

Material: Acrylic (Reflector)
ABS (Base)

RF-220 Reflector (Optional)

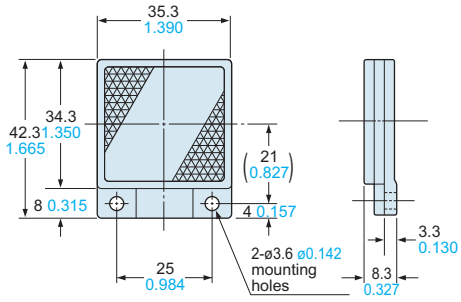

Material: Acrylic (Reflector)
ABS (Base)

RF-210 Reflector (Optional)

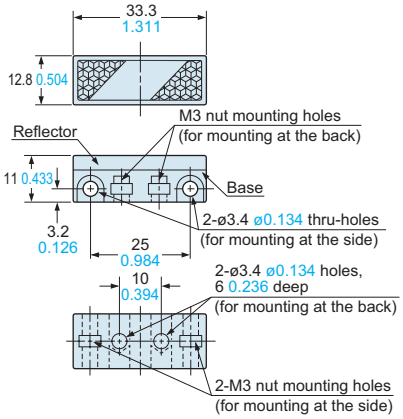

Material: Acrylic (Reflector)
ABS (Base)
Two M3 (length 8 mm 0.315 in)
screws with washers and two nuts are attached.

RF-11 Reflective tape (Optional)

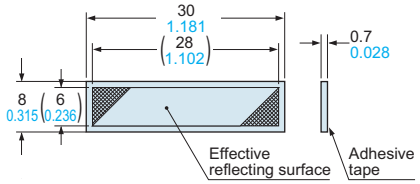

Material: Acrylic

RF-12 Reflective tape (Optional)

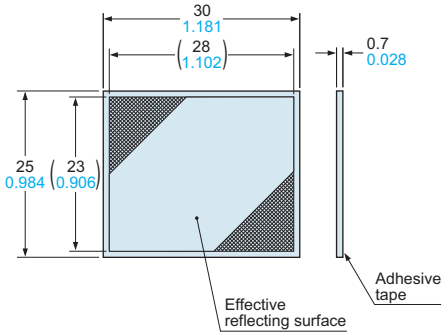

Material: Acrylic

RF-13 Reflective tape (Optional)

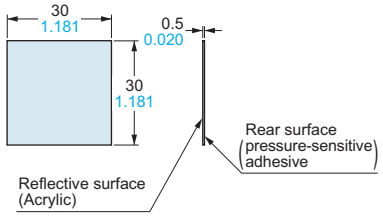

MS-CX2-1 Sensor mounting bracket (Optional)

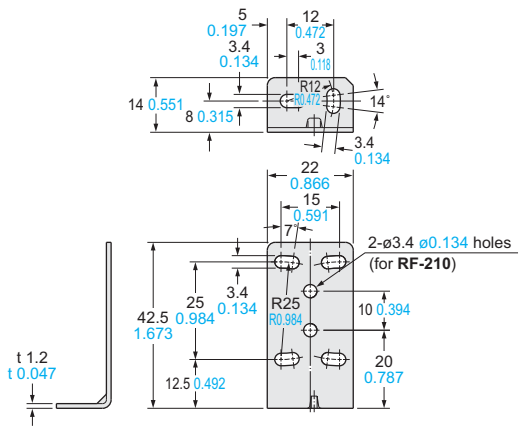

Material: Stainless steel (SUS304)
Two M3 (length 12 mm 0.472 in) screws
with washers are attached.

Assembly dimensions

Mounting drawing with the receiver of **CX-41**□

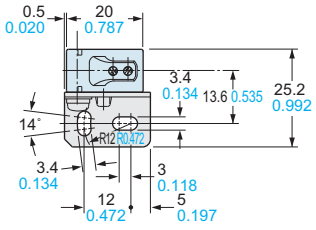

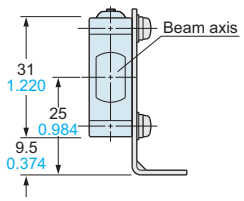

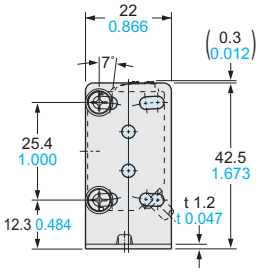

MS-CX2-2

Sensor mounting bracket (Optional)

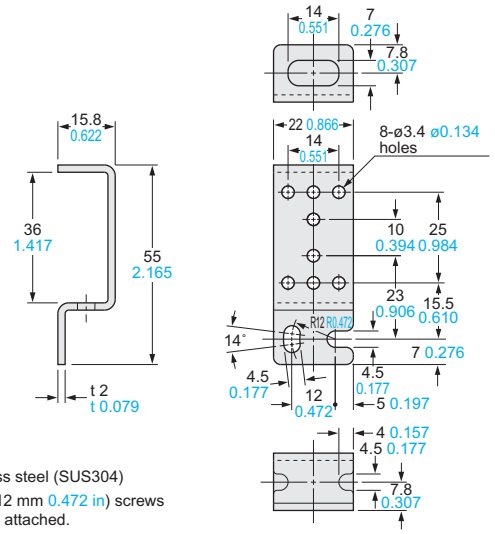

Material: Stainless steel (SUS304)
Two M3 (length 12 mm 0.472 in) screws with washers are attached.

Assembly dimensions

Mounting drawing with the receiver of **CX-41**□

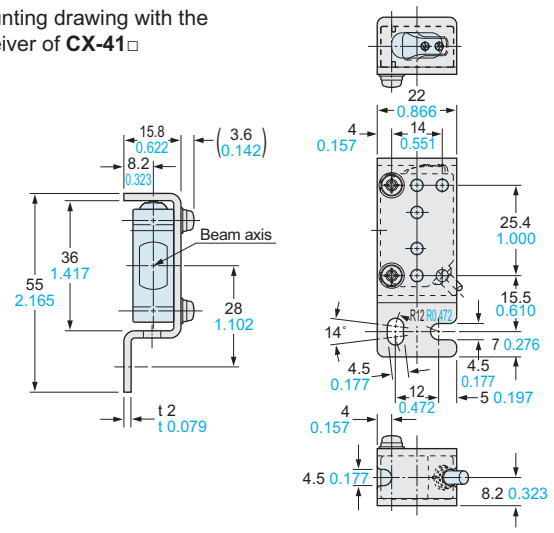

MS-CX2-4

Sensor mounting bracket (Optional)

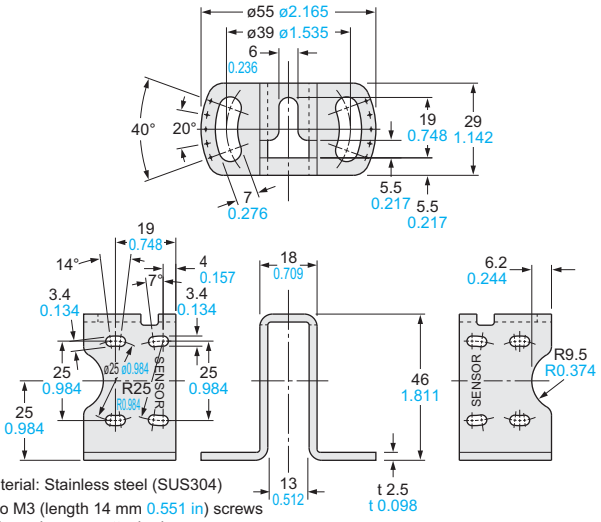

Material: Stainless steel (SUS304)
Two M3 (length 14 mm 0.551 in) screws with washers are attached.

Assembly dimensions

Mounting drawing with the receiver of **CX-41**□

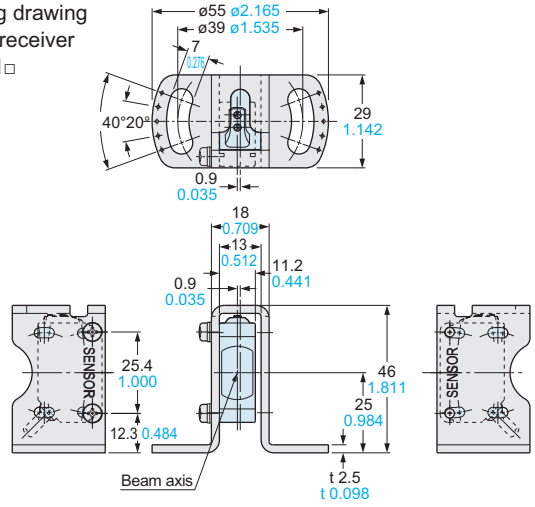

MS-CX2-5

Sensor mounting bracket (Optional)

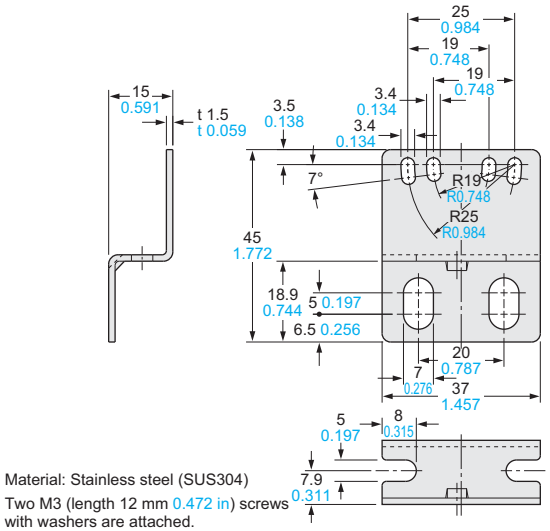

Material: Stainless steel (SUS304)
Two M3 (length 12 mm 0.472 in) screws with washers are attached.

Assembly dimensions

Mounting drawing with the receiver of **CX-41**□

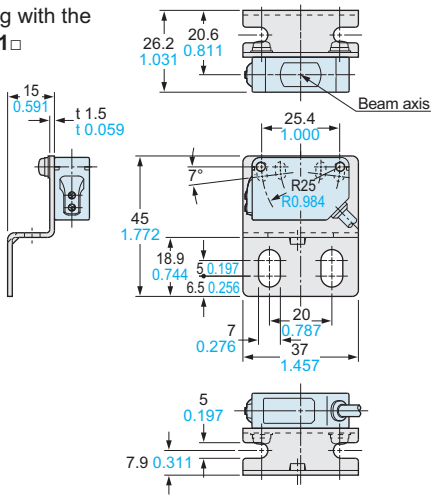

MS-CX-3

Sensor mounting bracket (Optional)

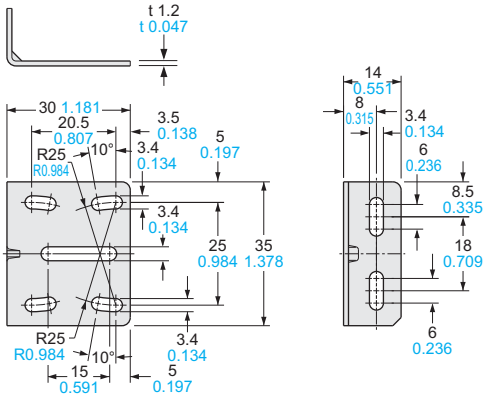

Material: Stainless steel (SUS304)
Two M3 (length 12 mm 0.472 in) screws with washers are attached.

Assembly dimensions

Mounting drawing with the receiver of **CX-41**□

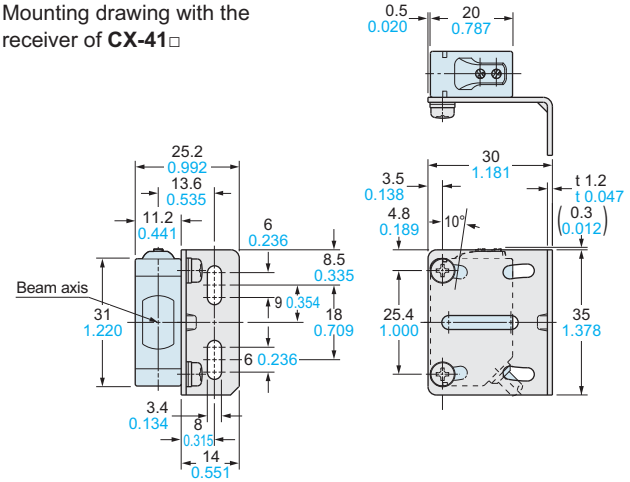

MS-RF21-1

Reflector mounting bracket for RF-210 (Optional)

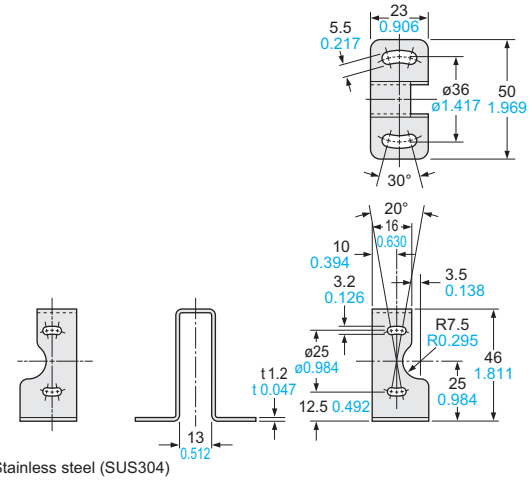

Assembly dimensions

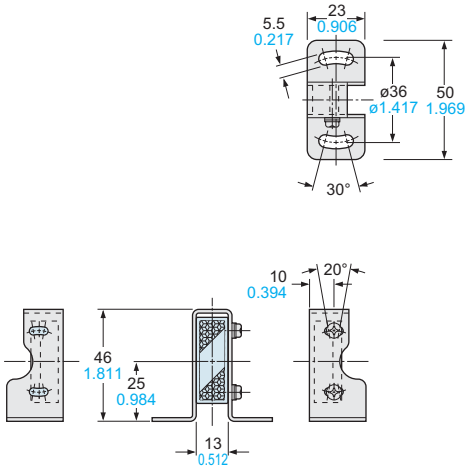

Material: Stainless steel (SUS304)
Two M3 (length 12 mm 0.472 in) screws with washers are attached.

MS-RF22

Reflector mounting bracket for RF-220 (Optional)

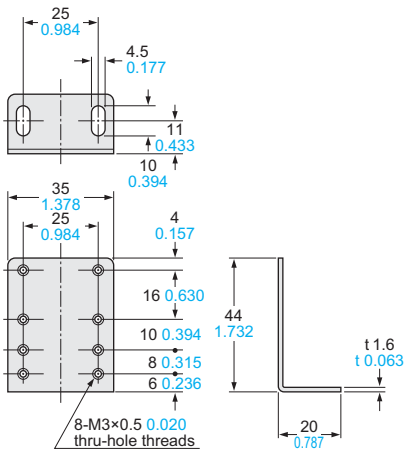

Material: Cold rolled carbon steel (SPCC) (Uni-chrome plated)
Two M3 (length 8 mm 0.315 in) screws with washers are attached.

Assembly dimensions

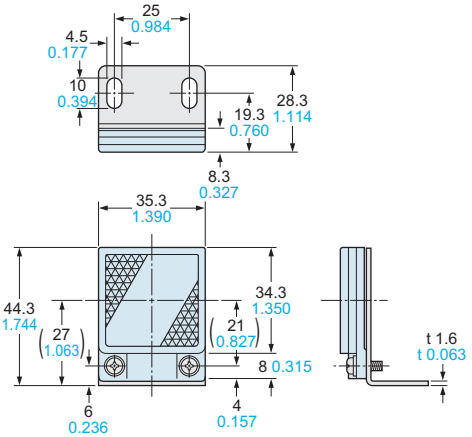

DIMENSIONS (Unit: mm in)

MS-RF23

Reflector mounting bracket for RF-230 (Optional)

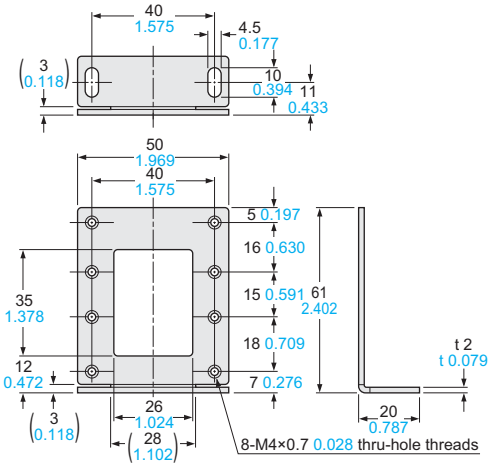

Material: Cold rolled carbon steel (SPCC)
(Uni-chrome plated)

Two M4 (length 10 mm 0.394 in) screws with washers are attached.

Assembly dimensions

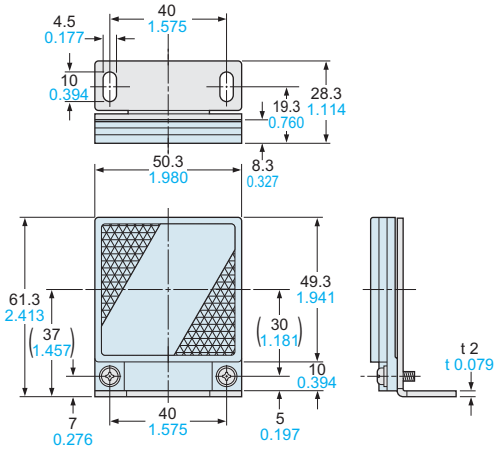

MS-AJ1

Universal sensor mounting stand (Optional)

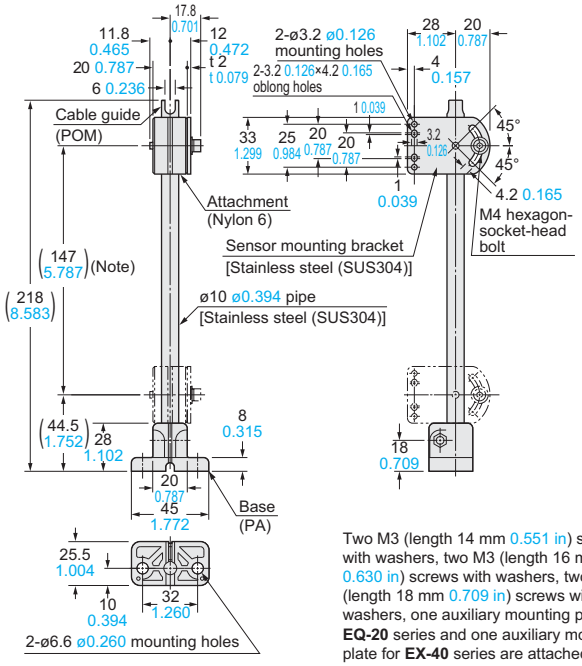

Two M3 (length 14 mm 0.551 in) screws with washers, two M3 (length 16 mm 0.630 in) screws with washers, two M3 (length 18 mm 0.709 in) screws with washers, one auxiliary mounting plate for **EQ-20** series and one auxiliary mounting plate for **EX-40** series are attached.

Note: The dimensions in the brackets indicate the adjustable range of the movable part.

MS-AJ2

Universal sensor mounting stand (Optional)

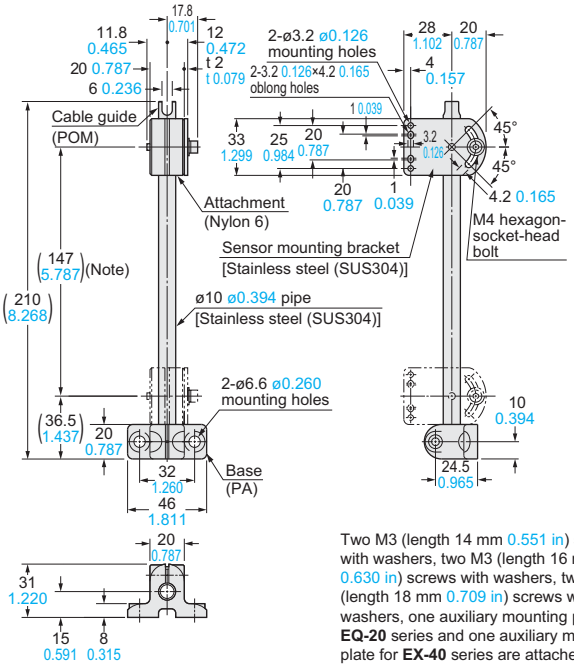

Two M3 (length 14 mm 0.551 in) screws with washers, two M3 (length 16 mm 0.630 in) screws with washers, two M3 (length 18 mm 0.709 in) screws with washers, one auxiliary mounting plate for **EQ-20** series and one auxiliary mounting plate for **EX-40** series are attached.

Note: The dimensions in the brackets indicate the adjustable range of the movable part.

Assembly dimensions with CX-400 series (Mounting part only)

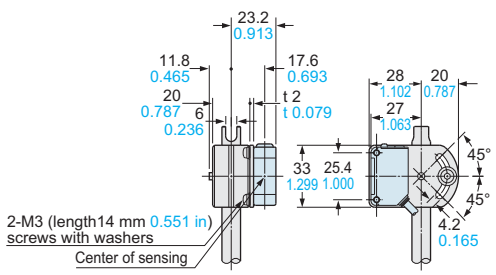

Assembly dimensions with RF-210 (Reflector) (Mounting part only)

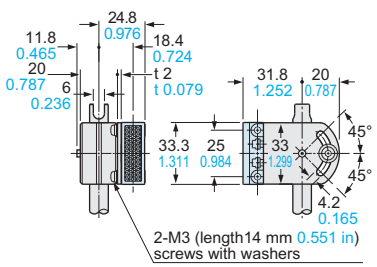

DIMENSIONS (Unit: mm in)

The CAD data in the dimensions can be downloaded from the website:
panasonic-electric-works.net/sunx

MS-AJ1-A Universal sensor mounting stand (Optional)

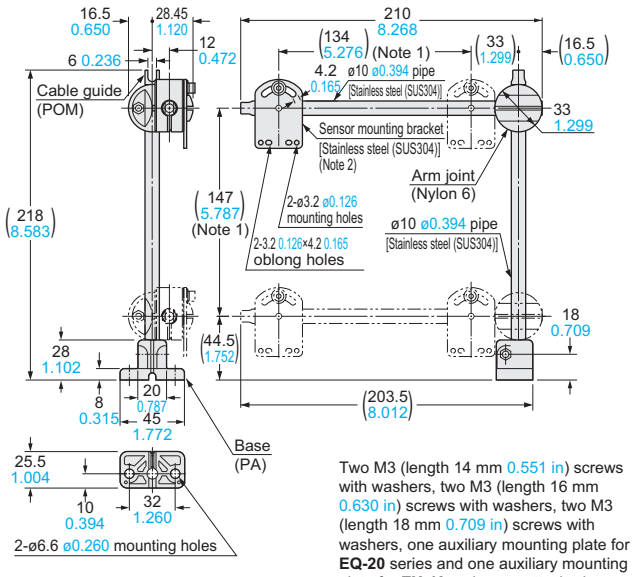

Two M3 (length 14 mm 0.551 in) screws with washers, two M3 (length 16 mm 0.630 in) screws with washers, two M3 (length 18 mm 0.709 in) screws with washers, one auxiliary mounting plate for **EQ-20** series and one auxiliary mounting plate for **EX-40** series are attached.

Notes: 1) The dimensions in the brackets indicate the adjustable range of the movable part.
2) Refer to **MS-AJ1** / **MS-AJ2** for the assembly dimensions with the sensor mounting bracket, sensor or reflector.

MS-AJ2-A Universal sensor mounting stand (Optional)

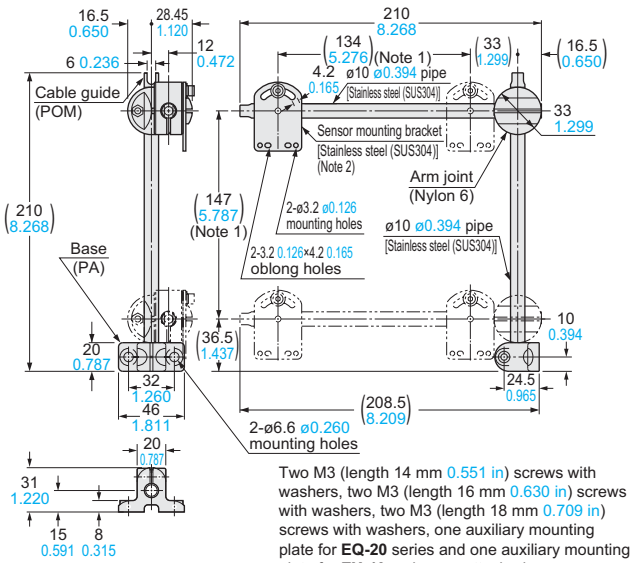

Two M3 (length 14 mm 0.551 in) screws with washers, two M3 (length 16 mm 0.630 in) screws with washers, two M3 (length 18 mm 0.709 in) screws with washers, one auxiliary mounting plate for **EQ-20** series and one auxiliary mounting plate for **EX-40** series are attached.

Notes: 1) The dimensions in the brackets indicate the adjustable range of the movable part.
2) Refer to **MS-AJ1** / **MS-AJ2** for the assembly dimensions with the sensor mounting bracket, sensor or reflector.

MS-AJ1-M Universal sensor mounting stand (Optional)

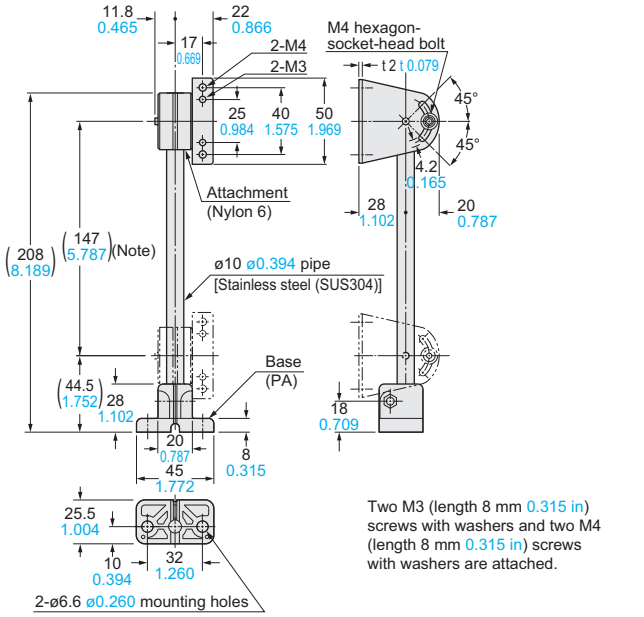

Two M3 (length 8 mm 0.315 in) screws with washers and two M4 (length 8 mm 0.315 in) screws with washers are attached.

Note: The dimensions in the brackets indicate the adjustable range of the movable part.

MS-AJ2-M Universal sensor mounting stand (Optional)

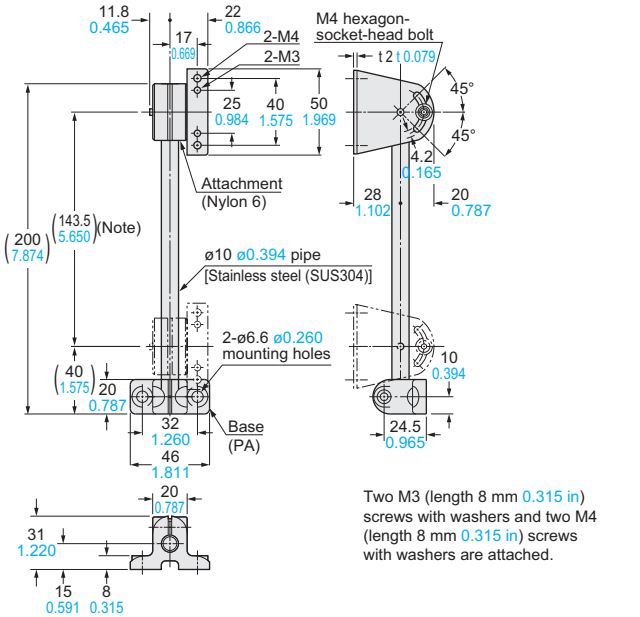

Two M3 (length 8 mm 0.315 in) screws with washers and two M4 (length 8 mm 0.315 in) screws with washers are attached.

Note: The dimensions in the brackets indicate the adjustable range of the movable part.

Assembly dimensions with RF-220 (Reflector) (Mounting part only)

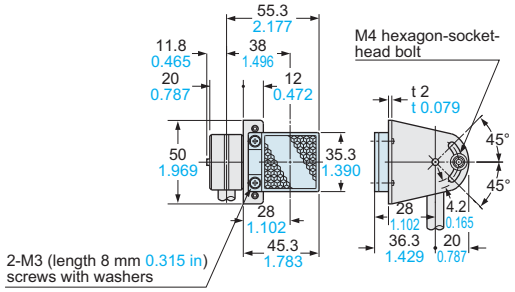

Assembly dimensions with RF-230 (Reflector) (Mounting part only)

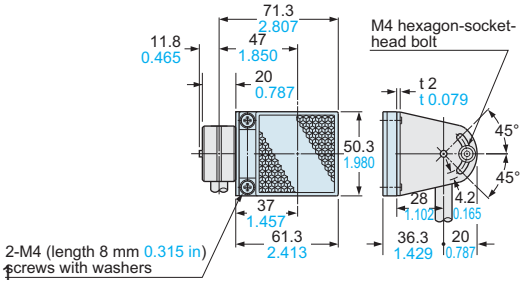

Protecting the environment is one of our guiding business principles

Promoting a totally lead-free working environment

We are now working to eliminate the use of lead in all our in-house manufacturing processes such as in reflow ovens, hand soldering and parts and substrates procurement.

Using simple packaging

Simple, environmentally friendly packaging material reduces waste.



ISO 14001 environmental management system certification acquired

ISO 14001
JQA-EM0528

Our Nagoya Head Office and Factory acquired ISO 14001 certification in September 1999. Now and into the future, we will continuously improve environmental management systems based on our Environment Policy, which focuses on the promotion of environmentally friendly business activities and product development.

Please contact .....

Panasonic Electric Works SUNX Co., Ltd.

2431-1 Ushiyama-cho, Kasugai-shi, Aichi, 486-0901, Japan
■Telephone: +81-568-33-7211 ■Facsimile: +81-568-33-2631
Overseas Marketing Department
■Telephone: +81-568-33-7861 ■Facsimile: +81-568-33-8591
panasonic-electric-works.net/sunx

Panasonic

All Rights Reserved ©Panasonic Electric Works SUNX Co., Ltd. 2010

No. CE-CX400-2-3 November, 2010

Spedfications are subject to change without notice.

Printed in Japan

18/07/2011