SERIES 1858 - MINIATURE DOUBLE-POLE ROCKER SWITCHES

TO 10 (4) A 250 V AC 1E4



PRODUCT FEATURES

- Non-illuminated rocker switch
- Powerful with inrush currents (capacitive) up to 100 A
- Immediately self-extinguishing due to UL 94 V-0 material
- Conformant acc. to EN 60065 par. 14.6

ON REQUEST

- Other colors
- Other printing variants
- Single-pole assembled
- Cable assembly

Mechanical life endurance	10E4
Operating force	≤ 5 N
Inrush current (capacitive)	100 A
Contact resistance (new condition)	< 100 mOhm (1 A 12 V DC)
Insulation resistance (new condition)	> 100 MOhm (500 V DC)
Proof tracking	250 PTI
Protection type	IP 40
Ambient temperature	terminal side -20 °C ... +100 °C actuating side -20 °C ... +55 °C
Flammability	UL 94 V-0 UL 94 V-2 (in the versions in white)
Glow wire test temperature	850 °C
Material actuator housing terminals	PA PA silver plated
Plug force of the terminals	≤ 80 N
Approval marks	/ /
Suitable for appliances of protection class II	

SERIES 1858 - MINIATURE DOUBLE-POLE ROCKER SWITCHES

TO 10 (4) A 250 V AC 1E4



double-pole



Actuator color / printing	Housing color	10 (4) A 250 V AC 1E4	6 (4) A 250 V AC 5E4	12 A 250 V AC 1/2 HP	12 A 125 V AC 1/3 HP	Terminal type	Terminal description	Contact distance (mm)	Contact material	EN 60335 cap. 30 conform "G"	Miscellaneous	Stock version
ON / OFF switch (DPST)												
1858.0103		o	o	o	o			≥ 3	Ag	o		
1858.0104		o	o	o	o			≥ 3	Ag	o		
1858.1102		o	o	o	o		4.8	≥ 3	Ag	o		o
1858.1103		o	o	o	o		4.8	≥ 3	Ag	o		o
1858.1104		o	o	o	o		4.8	≥ 3	Ag	o		
1858.1105		o	o	o	o		4.8	≥ 3	Ag		terminal spacing 10	
1858.2202		o	o	o	o			≥ 3	Ag	o		o
1858.2204		o	o	o	o			≥ 3	Ag	o		
1858.4202		o	o	o	o			≥ 3	Ag	o		o
1858.4205		o	o	o	o			≥ 3	Ag	o		o
1858.9202		o	o	o	o			≥ 3	Ag	o	single-pole occupied	

SERIES 1858 - MINIATURE DOUBLE-POLE ROCKER SWITCHES

TO 10 (4) A 250 V AC 1E4



Basic type 1858
double-pole

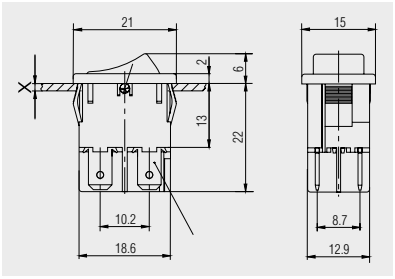

Quick-connect terminal 4.8 x 0.8

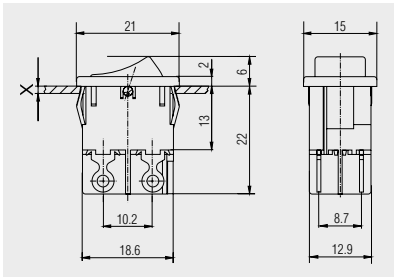

Solder terminal

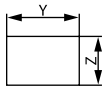

X = Wall thickness

x	y	z
0.75 ... 1.25	19.2 $^{-0.1}$	12.9 $^{+0.1}$
1.25 ... 2	19.4 $^{-0.1}$	12.9 $^{+0.1}$
2 ... 3	19.8 $^{-0.1}$	12.9 $^{+0.1}$

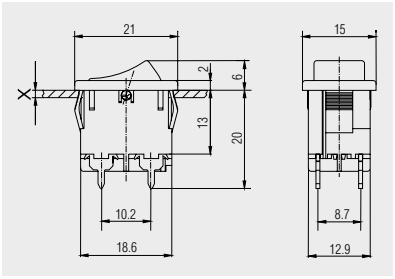

PCB terminal

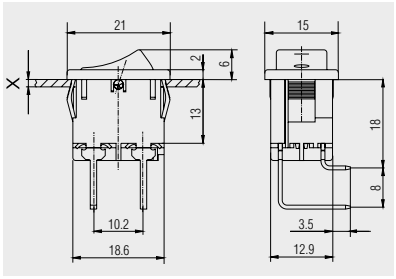

PCB terminal angled to
terminal side 1

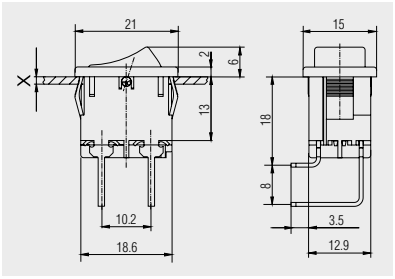

PCB terminal angled to
terminal side 2



Protection cap
203.089.011

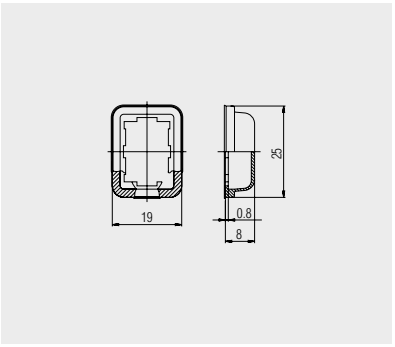

Transparent PVC-protection cap.
Serves as dust and water protection
of the actuation side.

1	2	3	4
recommended cut-out for snap-in fixing (edge opposite to snap-in direction) Empfohlener Ausschnitt für Rastbefestigung (Grat gegenüber Bestückungsseite)	wall thickness Wanddicke	Length of cut-out Ausschnittlänge	width of cut-out Ausschnittbreite
	0.75 to / bis 1.25	19.2 $_{-0.1}$	12.9 $^{+0.1}$
	1.25 to / bis 2	19.4 $_{-0.1}$	12.9 $^{+0.1}$
	2 to / bis 3	19.8 $_{-0.1}$	12.9 $^{+0.1}$

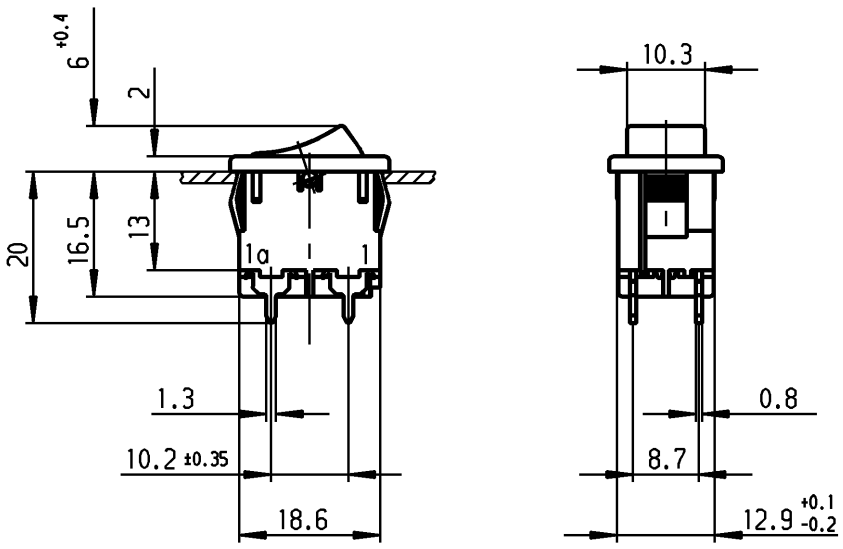

recommended terminal layout;
side of component
tolerances as per DIN IEC 326 item 3 very fine

Empfohlenes Lochbild;
Bauteileseite
Toleranzen nach DIN IEC 326 sehr fein

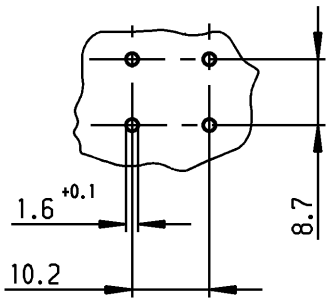

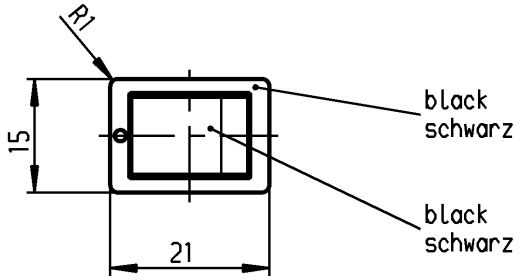

VERTRAULICH-CONFIDENTIAL

© Alle Rechte bei Marquardt GmbH, auch fuer den Fall von Schutzrechtsanmeldungen. Jede Verfuegungsbefugnis, wie Kopier- und Weitergaberecht, bei uns.

© This document is the exclusive property of Marquardt GmbH. Without our consent, it may not be reproduced or given to third parties.

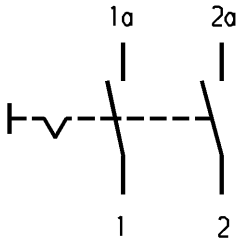

Marking
Aufschrift

Ⓜ
1858.

6(4)/250 ~5E4 T100/55
10(4)/250 ~
5/100A 250V ~

12A 125-250V AC
1/3 HP 125V AC
1/2 HP 250V AC
R138

date code of manufacture: year/week acc.to DIN EN 60062
Herstelljahr/-woche nach DIN EN 60062

on box:
Auf Verpackung: G

DPST

suitable for appliances of class II
protected according to DIN 40 050, IP40

Ausschalter 2polig

Für Geräte der Klasse II geeignet
Geschützt entsprechend DIN 40 050, IP40

G= matching IEC 60335-1:2001 clause 30
G= Konform nach IEC 60335-1:2001 Kap.30

Allgemeintoleranzen/UNTOLERANCED DIMENSIONS			PROJECTION
Für Längen und Radien FOR LENGTHS AND RADII. ±	Abmaße in mm für Nennmaßbereich in mm ALL DIMENSIONS ARE IN MILLIMETRES		
	bis/UP TO 6	über/OVER 6 bis/UP TO 30	über/OVER 30
	0.2	0.4	.

d	22997	17.10.94 Mut	i	41634	30.11.04 hhe
c	22926	26.08.94 Mut	h	36320	02.06.03 vor
b	26981	03.02.99 mut	g	26981	02.02.99 Mut
k			f	25590	08.12.97 Mut
j	47886	29.06.06 Mut	e	25455	04.11.97 Mut
Ausg. ISSUE	Änderung REVISION	gez. DRAWN BY	Ausg. ISSUE	Änderung REVISION	gez. DRAWN BY

Pause COPY | Blatt SHEET | Original DIN A4 | Maßstab SCALE 1:1

0 10 20 30 mm

gez./DRAWN BY 18.02.94 Mut
gepr./CHECKED BY Stl

Ersatz für/REPLACEMENT OF

K | Zeichn./DRAWING NO. 1858.2202

Appliance Switch
Geräteschalter

MARQUARDT
Marquardt GmbH, D-78604 Rietheim-Weilheim

Schutzvermerk nach DIN 34 beachten
COPYRIGHT RESERVED