©THIS DRAWING IS THE EXCLUSIVE PROPERTY OF MARQUARDT GMBH. WITHOUT THEIR CONSENT IT MAY NOT BE REPRODUCED OR GIVEN TO THIRD PARTIES.

CONFIDENTIAL

VERTRAULICH

Empfohlenes Lochbild - Bauteileseite
Toleranzen nach DIN IEC 326 sehr fein

recommended terminal layout - component side
tolerances as per DIN IEC 326 item3 very fine

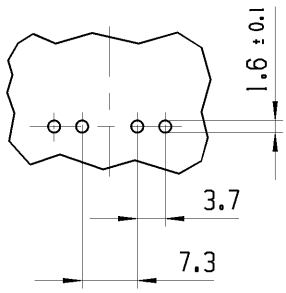


Betaetigungskraft F=7N± 2.5
operating force

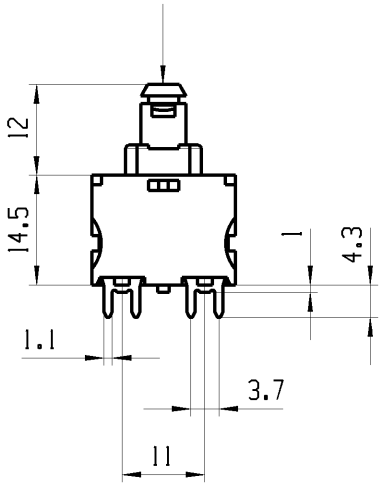


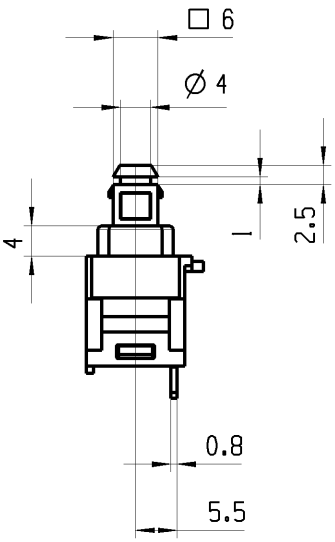


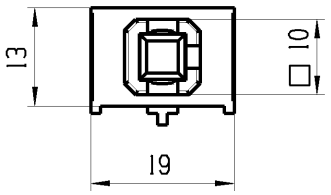


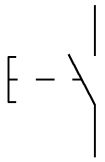

Aufschrift:
Marking:

168..

12(8)/250 ~
10(8)/250 ~ 5E4 T100/55
05

12A 125-250V AC
1/2 HP 125-250V AC
R97

Herstellort/-jahr/-woche
nach DIN EN 60062
code of manufacture:
plant/year/week
acc. to DIN EN 60062

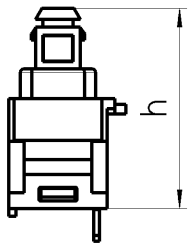


Schliesser 1-polig
Fuer Geraete der Klasse II geeignet

SPNO
suitable for appliance of class II

| Schalt-stellung | operating position | h |
|---|---|---|
| AUS | OFF | 26.5 |
| EIN | ON | ⩽ 23.8 |
| Block | block | 22.2 |

| | | |