© THIS DRAWING IS THE EXCLUSIVE PROPERTY OF MARQUARDT. WITHOUT THEIR CONSENT IT MAY NOT BE REPRODUCED OR GIVEN TO THIRD PARTIES.

CONFIDENTIAL

VERTRAULICH

© Alle Rechte bei Marquardt, auch fuer den Fall von Schutzrechtsanmeldungen. Jede Verfuegungsbefugnis, wie Kopier- und Weitergaberecht, bei uns.

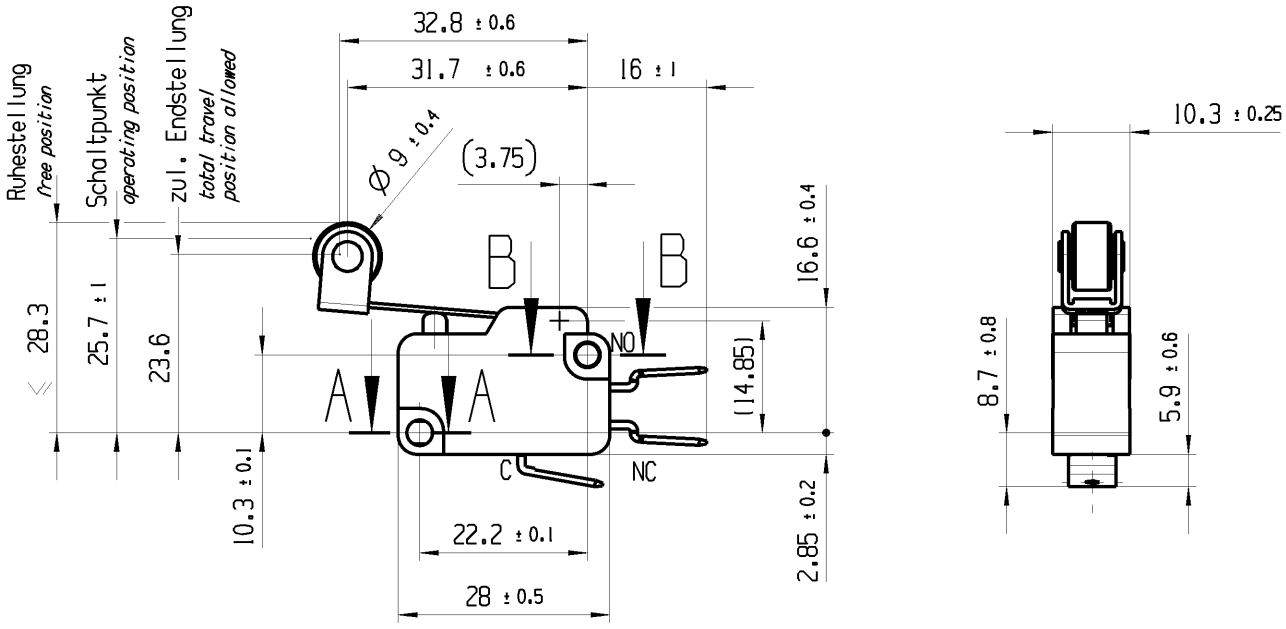

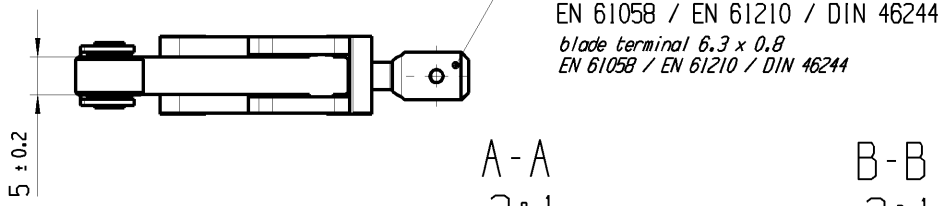

A-A
2:1

B-B
2:1

Aufschrift
marking

1006 μ T100
10(4) /400~ 10E3
6(2.5) /400~ 50E3
05

10A 125V AC 1/4HP
10A 250V AC 1/4HP
R44

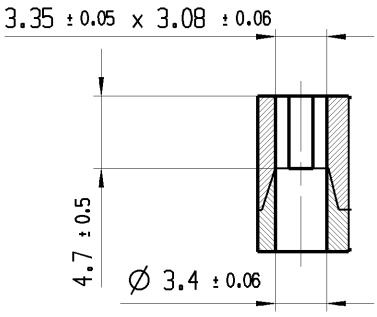

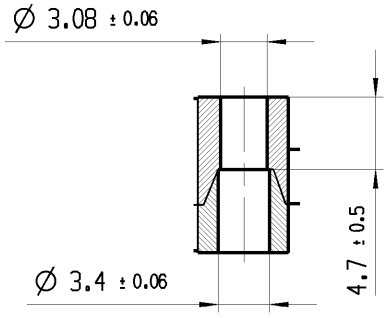

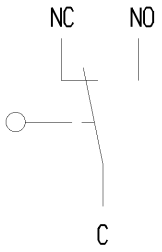

Herstellort / -jahr / -woche
date code of manufacture: place / year / week

Wechsler 1-polig
single pole changeover

Schalt-Betaetigungskraft 0.7 bis 1.4 N
actuating force *0.7 up to 1.4 N*

Differenzweg ≤ 0.7 mm
movement differential

General tolerances						
All dimensions are in millimetres	Shape and location	Angle	Edge tolerance		Length	Radii
	◎ ⫩	± 2 °		0-6	± 0.1	± 0.2
				>6-15	± 0.15	± 0.3
				>15-30	± 0.2	± 0.5
				>30-70	± 0.3	± 10%
				>70-120	± 0.4	
				>120	± 0.8	

Index	ECN-No.	Date (YYYY-MM-DD)	Edited by
e	109072	2017-08-17	TRIGUIK
d	90078	2014-06-23	BRC
c	85450	2013-10-29	BRC
b	26264	1999-09-09	PFU

Sheet 01

Format DIN A4 | Projection | Scale 1:1

System NX V10.0

Replacement of
Zg.gl.Nr.v.13.11.1996

Ident.	Document number	Index
K	10064302	e

snap action switch

MARQUARDT