XPort® Embedded Device Server Data Sheet

General Description

The Lantronix® XPort® embedded device server is the most compact, integrated solution available to web-enable any device with a serial interface. By simply adding an XPort unit to a product design, device manufacturers cut their design cycle by as much as 80% and are able to offer Ethernet connectivity in record time.



The XPort module offers the highest level of integration available in a device server. Within a compact RJ45 package is a DSTni® EX 186 controller, memory, 10/100 Ethernet transceiver, high-speed serial port, status/diagnostic LEDs, and 3 programmable I/O pins. In the space that is normally consumed by a connector, the XPort unit provides a complete networking interface.

To enable access to a local network or the Internet, the XPort module integrates a fully developed TCP/IP network stack and OS. The XPort unit also includes an embedded web server used to remotely configure, monitor, or troubleshoot the attached device.

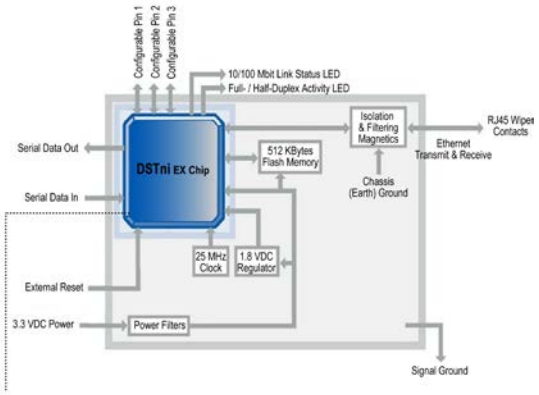

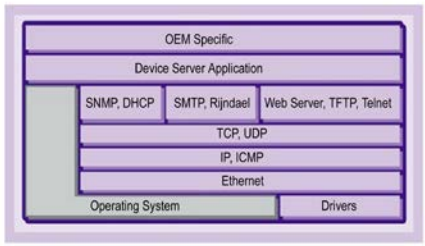

Where there's a need for custom user interfaces and a desire to use common and familiar tools, the XPort module can serve web pages to a web browser. The XPort unit becomes a conduit between you and your device over the network or Internet.

The Lantronix DeviceInstaller™ utility is a Windows based configuration tool that simplifies installation and setup. The XPort module can also be set up locally through its serial port, or remotely over a network using Telnet or a web browser. Flash memory provides for maintenance-free nonvolatile storage of web pages, and allows future system software upgrades.

Using our highly integrated hardware and software platform, you will add profit to your bottom line by significantly reducing product development time, risk, and cost.

Key Features

- The only complete, integrated solution in an RJ45 form factor
- Complete integrated solution
- Embedded web server
- 10/100Mbit Ethernet – Auto-Sensing
- Stable, field proven TCP/IP protocol suite and web-based application framework
- Easy configuration through a web interface
- Easy customization of HTML web pages and configuration screens
- Interactive web pages through the use of Java applets
- E-mail
- 128-, 192-, or 256-bit AES Rijndael encryption (Optional)
- EMI tested and compliant
- Extended operating temperature:
  -40 to +85˚ C normal mode
  -40 to +75˚ C high-performance mode
- High-performance processor
  (12 MIPS at 48 MHz, 22 MIPS at 88 MHz)
- Network overhead handled by XPort unit
- Password protection
- Upgrade XPort module's firmware over the network
- 3.3V power
- Serial-to-10/100 Ethernet conversion
- 921,600 baud serial speed

Copyright© 2014, Lantronix. All rights reserved.

Hardware & Software Description

The XPort unit is a complete solution (hardware and software) for web-enabling your edge devices. Packed into an RJ45 connector smaller than your thumb, this powerful device server comes with a 10BASE-T/100BASE-TX Ethernet connection, a reliable and proven operating system stored in flash memory, an embedded web server, a full TCP/IP protocol stack, and standards-based (AES) encryption.

The XPort software runs on a DSTni EX controller which has 256 KB of SRAM, 16 KB of boot ROM, and a MAC with integrated 10/100BASE-TX PHY. The XPort module communicates to the edge device through a 3.3V serial interface and three general-purpose programmable I/O pins. 512 KB of flash memory is included for storing firmware and web pages. The XPort runs on 3.3V, and has a built-in voltage supervisory circuit that will trigger a reset if the supply voltage drops to unreliable levels (2.7V). A built-in 1.8V regulator drives the processing core of the EX controller.

An RJ45 Ethernet cable connects directly into an XPort unit. Ethernet magnetics, status LEDs, and shielding are built in. The XPort module was designed to meet class B emissions levels, which makes the electromechanical integration very simple.

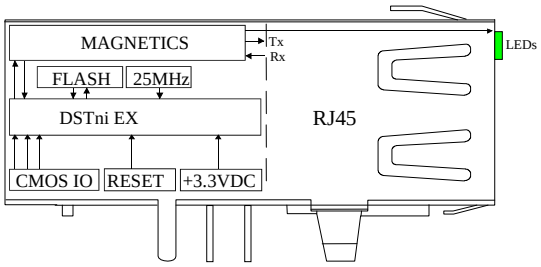

PCB Interface

The 8-pin PCB interface consists of 3.3V CMOS Serial In/Out, 3 Flow Control/Handshake/PIO pins, reset input, +3.3V power, and signal ground. The serial pins and CP pins are 5V tolerant. RESET and Power are 3.3V tolerant.

Table 1 - PCB Interface Signals

Signal Name	Pin	Function
GND	1	Circuit Ground
Vcc	2	+3.3V Power In
Reset (In)	3	External Reset In
Data OUT	4	Serial Data Out
Data IN	5	Serial Data In
CP1	6	CP1 can be configured as follows: • **Flow control**: RTS (Request to Send) **output** driven by DSTni's built-in UART for connection to CTS of attached device. • **Programmable input/output**: CP1 can be driven or read through software control, independent of serial port activity.
CP2	7	CP2 can be configured as follows: • **Modem control**: DTR (Data Terminal Ready) **output** driven by DSTni's built-in UART for connection to DCD of attached device. • **Programmable input/output**: CP2 can be driven or read through software control, independent of serial port activity.
CP3	8	CP3 can be configured as follows: • **Flow control**: CTS (Clear to Send) **input** read by DSTni's built-in UART for connection to RTS of attached device. • **Modem control**: DCD (Data Carrier Detect) **input** read by DSTni's built-in UART for connection to DTR of attached device. • **Programmable input/output**: CP3 can be driven or read through software control, independent of serial port activity.

Ethernet Interface

The 10/100 Ethernet magnetics, network status LEDs, and RJ45 connector are integrated into the XPort unit.

Table 2 - Ethernet Interface Signals

Signal Name	DIR	Contact	Primary Function
TX+	Out	1	Transmit Data +
TX-	Out	2	Transmit Data –
RX+	In	3	Receive Data +
RX-	In	6	Receive Data –
Not Used		4	Terminated
Not Used		5	Terminated
Not Used		7	Terminated
Not Used		8	Terminated
SHIELD			Chassis Ground

Copyright© 2014, Lantronix. All rights reserved.

Protocol Support

The XPort module uses Internet Protocol (IP) for network communications and Transmission Control Protocol (TCP) to assure that no data is lost or duplicated, and that everything sent arrives correctly at the target.

Other supported protocols are listed below:

- ARP, UDP, TCP, ICMP, Telnet, TFTP, AutoIP, DHCP, HTTP, and SNMP for network communications.
- TCP, UDP, and Telnet for connections to the serial port.
- TFTP for firmware updates.
- IP for addressing, routing, and data block handling over the network.
- User Datagram Protocol (UDP) for typical datagram applications in which devices interact with other devices without maintaining a point-to-point connection.

* For a complete discussion of protocol support, see the XPort user manual for the XPort embedded device server.

LEDs

The device contains two bi-color LEDs built into the front of the XPort connector. (See dimension drawing for location.)

Link LED (Left Side)		Activity LED (Right Side)	
Color	Meaning	Color	Meaning
Off	No Link	Off	No Activity
Amber	10 Mbps	Amber	Half-Duplex
Green	100 Mbps	Green	Full-Duplex

Recommended PC Board Layout

The hole pattern and mounting dimensions for the XPort unit are shown in the following drawing:

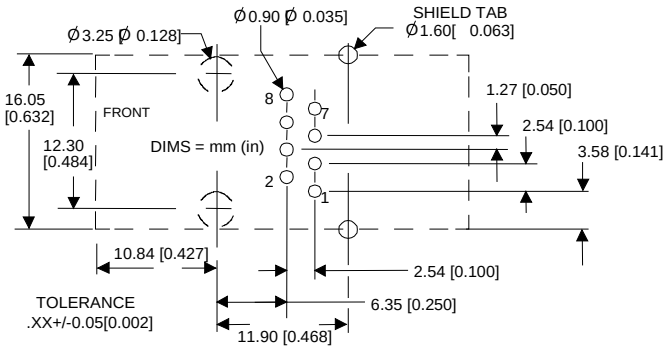

For proper heat dissipation, the PCB should have approximately 1 square inch of copper attached to the shield tabs. The shield tabs are an important source of heat sinking for the device.

Dimensions

The dimensions of the XPort module are shown in the following drawings:

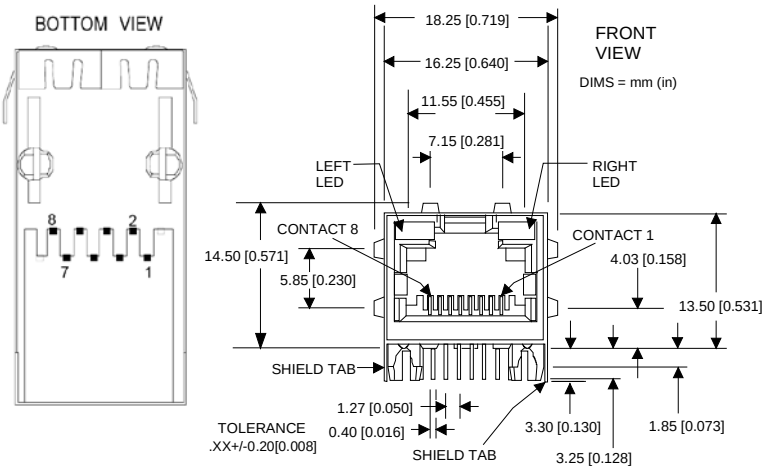

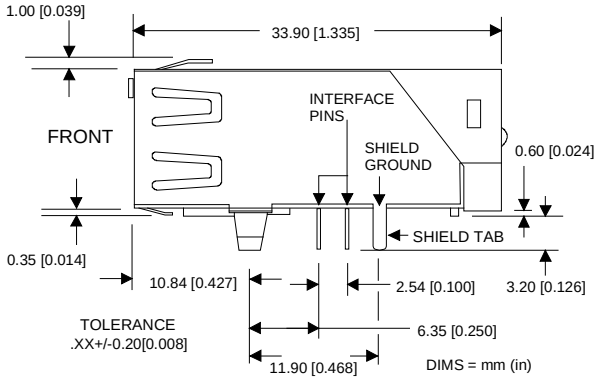

OEM License Agreement

With the purchase of an XPort module, the OEM agrees to terms and conditions of an OEM License Agreement whereby Lantronix grants to the OEM (subject to the complete terms and conditions of the OEM License Agreement) a limited, non-exclusive, non-transferable, royalty-free, revocable license to (i) use the software in object code form solely for OEM's use, without any modification, on the XPort embedded device server, or for OEM's internal use in the development and integration of the XPort unit with OEM's products, (ii) market or sublicense the software as a part of a combination of the XPort unit with OEM's products, and (iii) reproduce and distribute the software in object code form only.

The foregoing is a summary of the OEM License Agreement and is not intended to be a complete substitute for the OEM License Agreement. Additional terms and conditions apply. The full OEM License Agreement is available from Lantronix.

Copyright© 2014, Lantronix. All rights reserved.

XPort Technical Data

Category	Description
CPU, Memory	Lantronix DSTni EX 186 CPU, 256 KB zero wait state SRAM 512 KB Flash, 16 KB Boot ROM
Firmware	Upgradeable via TFTP and serial port
Reset Circuit	Internal 200ms power-up reset pulse. Power-drop reset triggered at 2.6V. External reset input causes an internal 200 ms reset.
Serial Interface	CMOS (Asynchronous) 3.3V-level signals. Rate is software selectable (300 bps to 921600 bps)
Serial Line Formats	7 or 8 data bits, 1-2 Stop bits, Parity: odd, even, none
Modem Control	DTR/DCD, CTS, RTS
Flow Control	XON/XOFF (software), CTS/RTS (hardware), none
Programmable I/O	3 PIO pins (software selectable) sink or source 4mA max.
Network Interface	RJ45 Ethernet 10BASE-T or 100BASE-TX (auto-sensing)
Compatibility	Ethernet: Version 2.0/IEEE 802.3
Protocols Supported	ARP, UDP/IP, TCP/IP, Telnet, ICMP, SNMP, DHCP, BOOTP, TFTP, Auto IP, and HTTP
LEDs	10BASE-T & 100BASE-TX Link Activity, Full/half duplex. Software generated status & diagnostic signals can optionally drive external LEDs through CP1 & CP3 (see Int. Guide).
Management	Internal web server, SNMP, Serial login, Telnet login
Security	Password protection, locking features, optional Rijndael 128-, 192-, or 256-bit encryption
Internal Web Server	Serves web pages Storage capacity: 384 KB
Weight	9.6 grams (0.34 oz)
Material	Metal shell, thermoplastic case
Temperature	Extended Temp RoHS product: -40°C to +85°C (-40°F to 185°F) Storage range: -40°C to +85°C (-40°F to 185°F)
Relative Humidity	Operating: 5% to 95% non-condensing
Shock/Vibration	Non-operational shock: 500 g's, Non-operational vibration: 20 g's
Warranty	2-year limited warranty
Included Software	Windows based DeviceInstaller configuration software & Windows based Com Port Redirector Supported Windows OS • x86 based Platforms: XP/2003 Server/Vista/Windows 7/Windows 8/2008 Server • x64 based Platforms: Vista/Windows 7/Windows 8/2008 Server
Emissions	FCC Part 15 Subpart B Industry Canada ICES-003 Issue 4 February 2004 CISPR 22: 2005 Information Technology Equipment VCCI V-3/200904 AS/NZS CISPR 22: 2006 EN 55022: 2006 +A1:2007 EN 61000-3-2:2006 EN 61000-3-3: 2008
Immunity	EN 55024: 1998 +A1: 2001 +A2: 2003 EN 61000-4-2: 1995 + A2: 2001 EN 61000-4-3: 2006 + A1: 2008 EN 61000-4-4: 2004 EN 61000-4-5: 2006 EN 61000-4-6: 2007 EN 61000-4-8: 1994 + A1:2001 EN 61000-4-11: 2004

Recommended Operating Conditions

Parameter	Symbol	Min	Typical	Max	Units
Supply Voltage	V_{CC}	3.14	3.3	3.46	Vdc
Supply Voltage Ripples	$V_{CC\ PP}$			2.0	%
Power Reset Threshold		2.7			Vdc
RESET Pin Input Low Voltage	$V_{RES\ IL}$			0.36	Vdc
RESET Pin Input High Voltage	$V_{RES\ IL}$	2.0		3.46	Vdc
CPx, RX Input Low Voltage	$V_{CP\ IL}$			0.8	Vdc
CPx, RX Input High Voltage	$V_{CP\ IH}$	2.0		5.5	Vdc
CPx, TX Output Low Voltage	$V_{CP\ OL}$			0.4	Vdc
CPx, TX Output High Voltage	$V_{CP\ OH}$	2.4			Vdc
Input Leakage Current	I_I			1	µA
Supply Current (idle)@ 48 MHz	I_{CC}		119		mA
Supply Current (10BASE-T activity)@ 48 MHz	I_{CC}		224		mA
Supply Current (10BASE-T activity)@ 88 MHz	I_{CC}		267		mA
Supply Current (100BASE-T activity)@ 48 MHz	I_{CC}		190		mA
Supply Current (100BASE-T activity)@ 88 MHz	I_{CC}		233		mA

Copyright© 2014, Lantronix. All rights reserved.

Development Kit

Introduction

A development kit for the XPort embedded device server is available to provide a simple, quick, and cost-effective way to evaluate the XPort unit. Use the development kit to integrate the XPort module to your product design, and give your newly networked product a test drive.

Features of the Development Kit

- Complete, ready to use XPort unit and supporting evaluation board
- +5VDC Universal Power Supply
- RS-232 cable, DB9M/F
- CAT5e UTP RJ45M/M Ethernet cable
- Serial adapter, 25-pin to 9-pin



Block Diagram

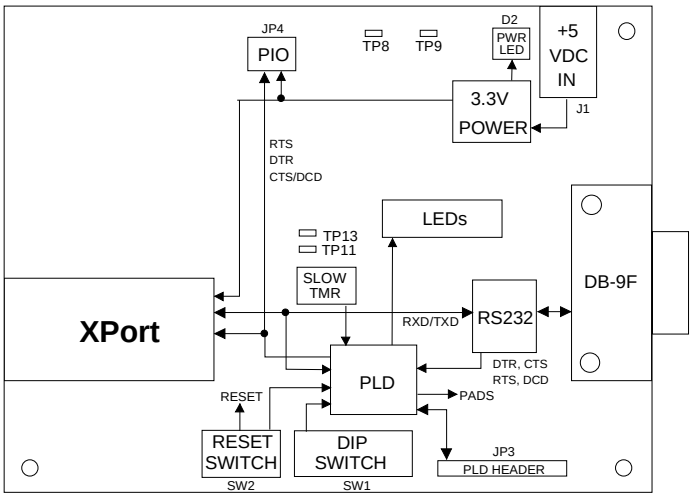

Features of the Evaluation Board

The evaluation board for the XPort unit includes an XPort module integrated with the following features:

- RS-232 (DCE) serial interface
- DIP switch configuration
- LED indication for power, RS-232 transmit / receive and PIO status
- Reset circuit with pushbutton
- Header connector for the PIO signals CP1, CP2, and CP3
- Test points to monitor the XPort unit's serial interface signals
- Timer

Ordering Information

XPort XE	XP1001000-05R	Standard XPort module	Min. order: 50 units
XPort SE	XP1002000-05R	Standard XPort module with 256-bit AES encryption	Min. order: 50 units
XPort SE SMPL	XP100200S-05R	XPort Sample with encryption	One XPort module enclosed
XPort Dev. Kit	XP10010NMK-01 XP1002000-05R	XPort Development Kit with encryption	

For details contact your local Lantronix representative or Lantronix directly:
Asia Pacific Region via e-mail at AsiaPacific_sales@lantronix.com
Europe via e-mail at eu_sales@lantronix.com
Japan via e-mail at japan_sales@lantronix.com
United States via e-mail at sales@lantronix.com or call OEM sales support at 800-526-8764

©2014 Lantronix, Inc. All rights reserved. Lantronix, XPort, with its patented technology (US Patents 6,881,096, 7,018,242; 8,010,789; 8,788,814;), and DSTni are registered trademarks and DeviceInstaller is a trademark of Lantronix, Inc. All other trademarks are the property of their respective owners. Specifications subject to change without notice. All rights reserved.

 Copyright© 2014, Lantronix. All rights reserved.