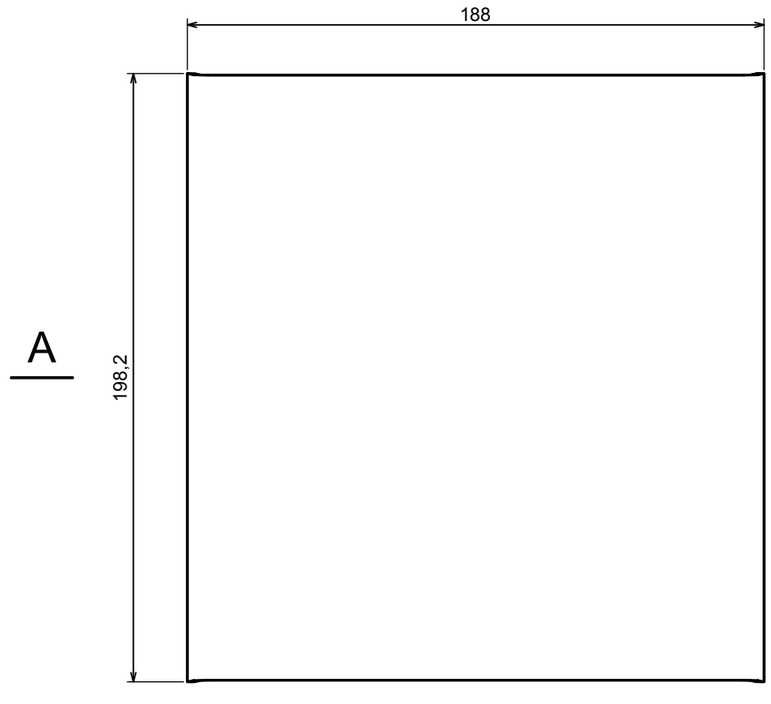

A-A

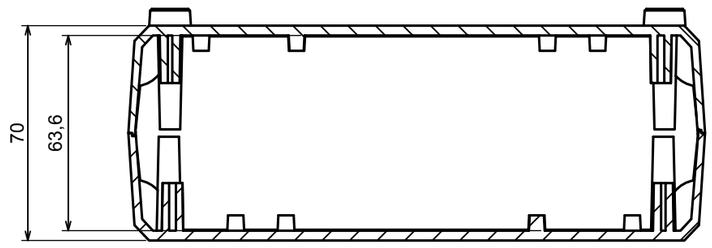

All rights reserved, Copyright Kradex 2017

Product model	Enclosure Z1 - Assembly	
Format: A3	Material: PS, ABS	KradeX
Scale 1:2	Tolerance: +/- 0.5	

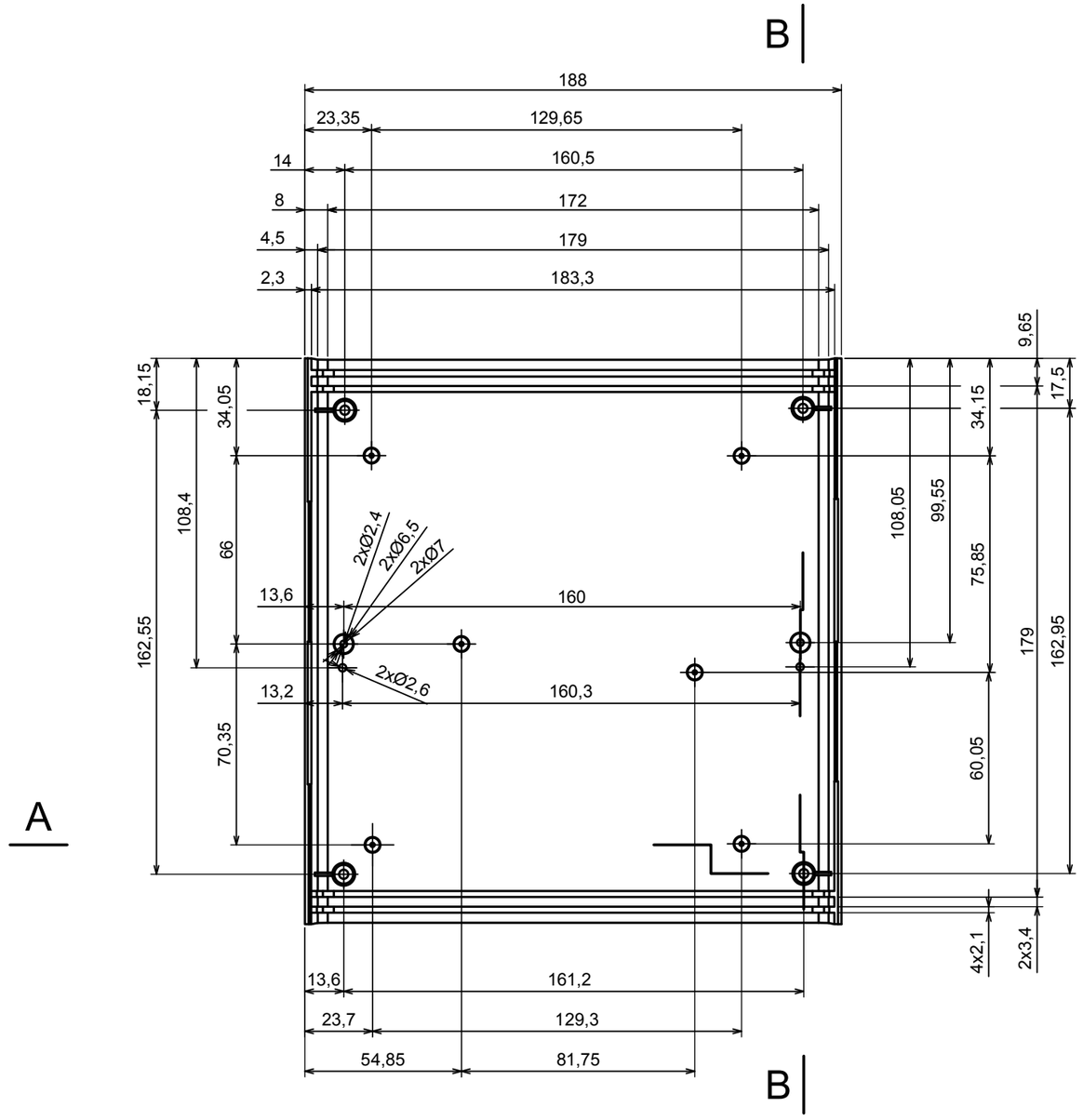

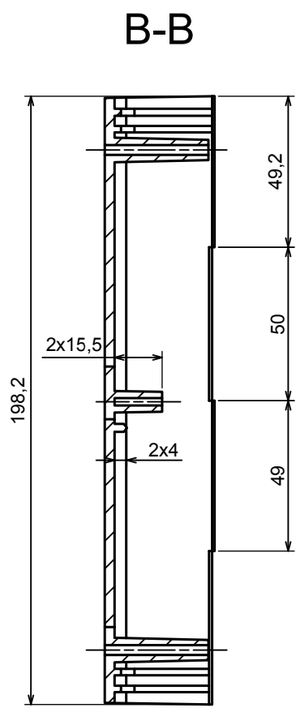

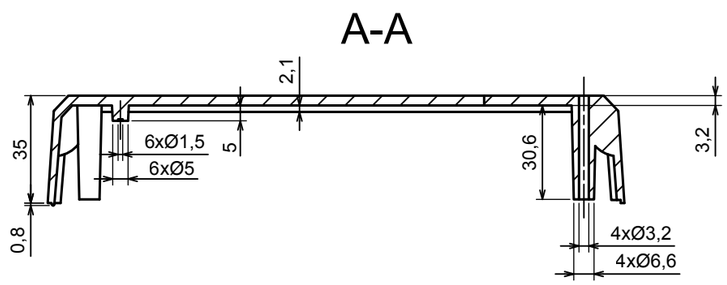

All rights reserved, Copyright Kradex 2017

Product model	Enclosure Z1 - Base	
Format: A3	Material: PS, ABS	KradeX
Scale 1:1	Tolerance: +/- 0.5	

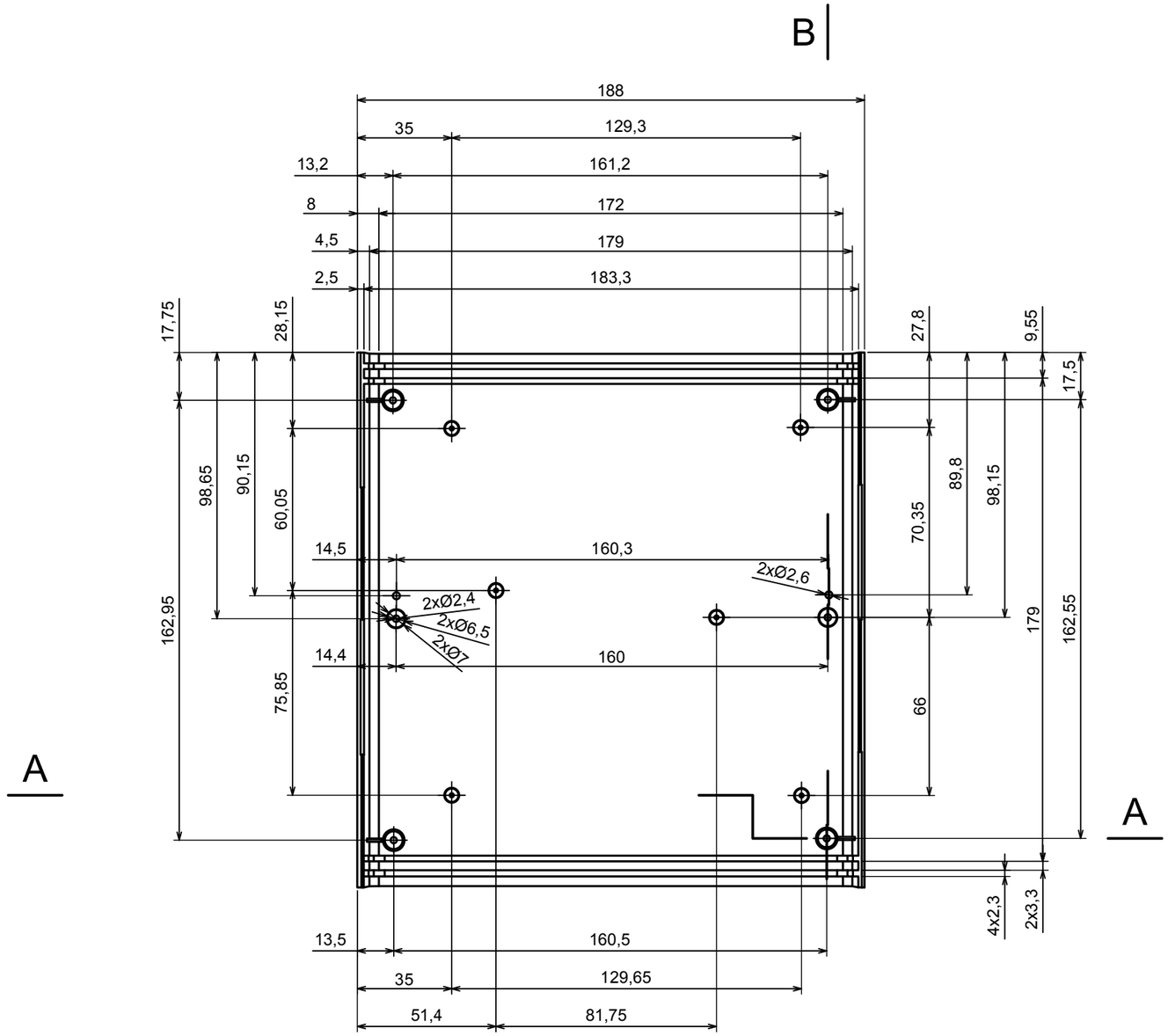

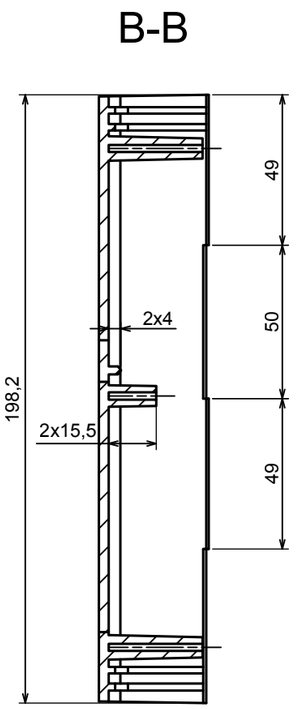

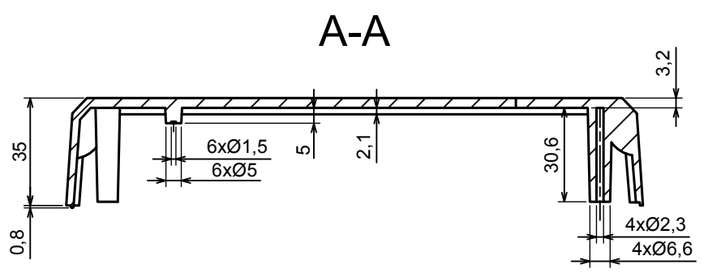

All rights reserved, Copyright Kradex 2017

Product model	Enclosure Z1 - Cover	
Format: A3	Material: PS, ABS	KradeX
Scale 1:1	Tolerance: +/- 0.5	

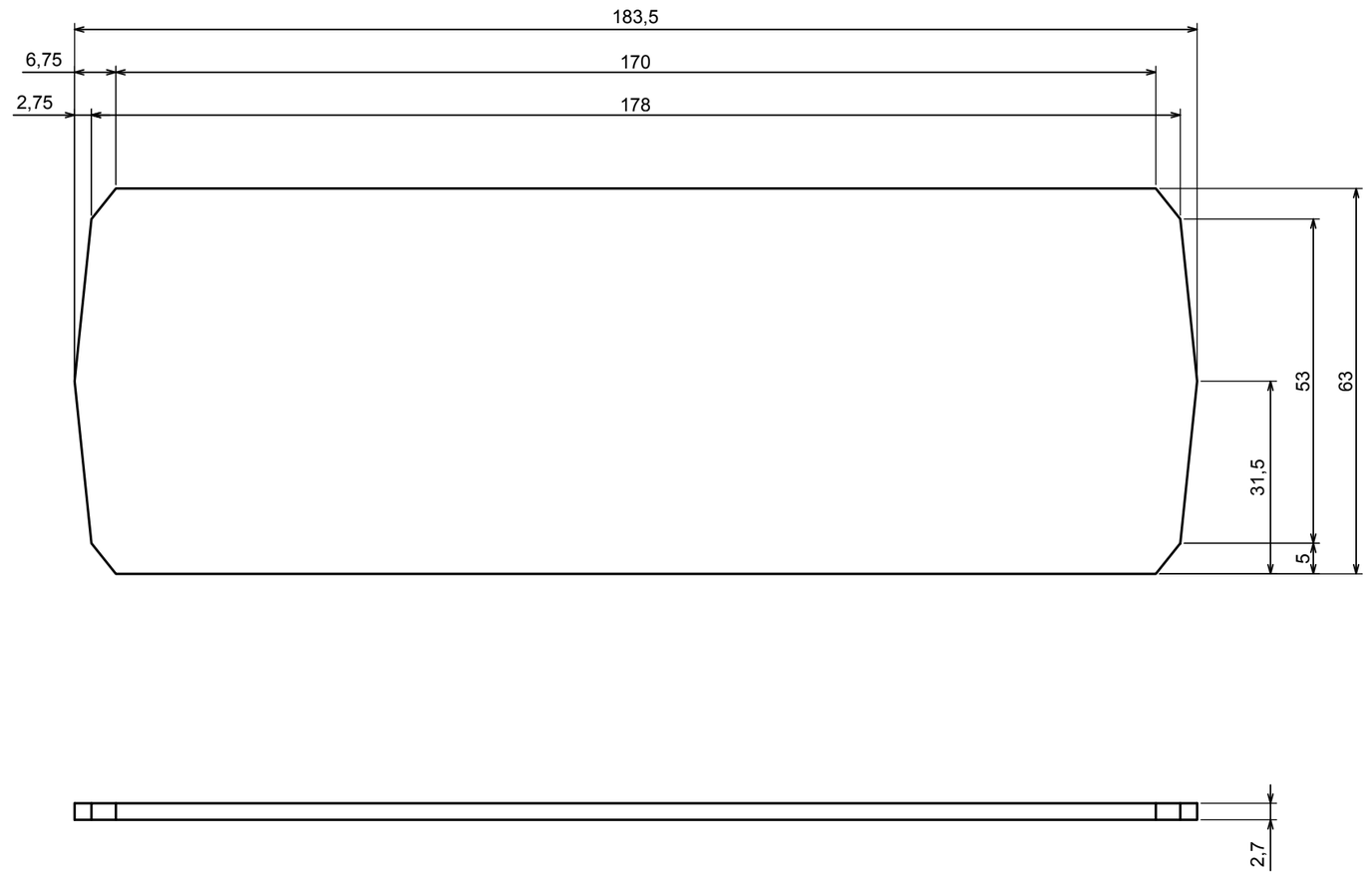

All rights reserved, Copyright Kradex 2017

Product model	Enclosure Z1 - Board	
Format: A3	Material: PS, ABS	KradeX
Scale 1:1	Tolerance: +/- 0.5	

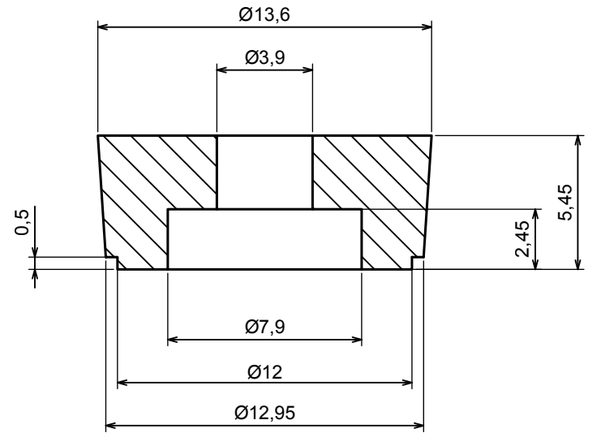

All rights reserved, Copyright Kradex 2017

Product model	Enclosure Z1 - Foot	
Format: A3	Material: PS, ABS	KradeX
Scale 4:1	Tolerance: +/- 0.5	