Kingbright

3.5x2.8 mm SMD CHIP LED LAMP

ATTENTION
OBSERVE PRECAUTIONS
FOR HANDLING
ELECTROSTATIC
DISCHARGE
SENSITIVE
DEVICES

Part Number: KA-3529ASEL2Z4S Hyper Red

Features

- Single color.
- Suitable for all SMT assembly and solder process.
- Available on tape and reel.
- White SMD package, silicone resin.
- Low thermal resistance.
- Package: 2000pcs / reel.
- Moisture sensitivity level : level 2a.
- RoHS compliant.

Description

The Hyper Red device is based on light emitting diode chip made from AlGaInP.

Static electricity and surge damage the LEDS.

It is recommended to use a wrist band or anti-electrostatic glove when handling the LEDs.

All devices, equipment and machinery must be electrically grounded.

Package Dimensions

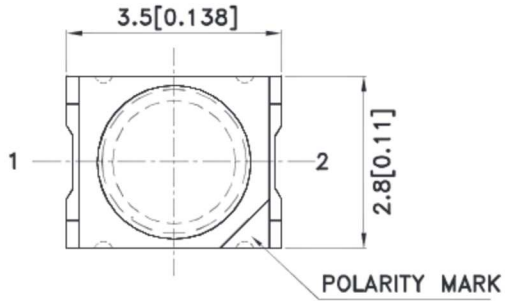

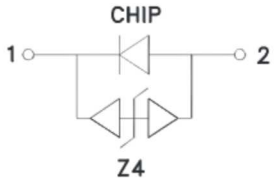

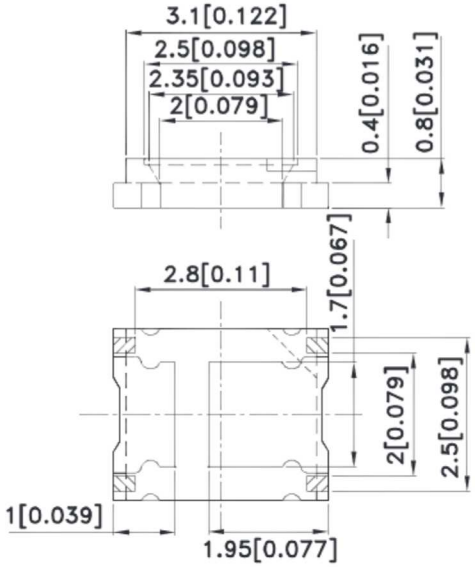

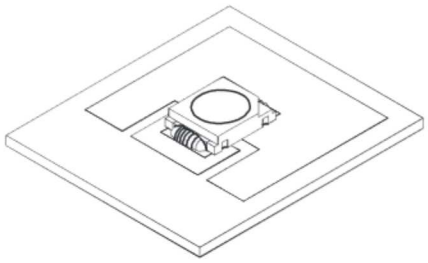

Notes:
1. All dimensions are in millimeters (inches).
2. Tolerance is ±0.25(0.01") unless otherwise noted.
3. The specifications, characteristics and technical data described in the datasheet are subject to change without prior notice.
4. The device has a single mounting surface. The device must be mounted according to the specifications.

Handling Precautions

Compare to epoxy encapsulant that is hard and brittle, silicone is softer and flexible. Although its characteristic significantly reduces thermal stress, it is more susceptible to damage by external mechanical force.
As a result, special handling precautions need to be observed during assembly using silicone encapsulated LED products. Failure to comply might lead to damage and premature failure of the LED.

1. Handle the component along the side surfaces by using forceps or appropriate tools.

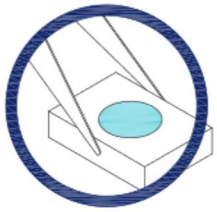

2. Do not directly touch or handle the silicone lens surface. It may damage the internal circuitry.

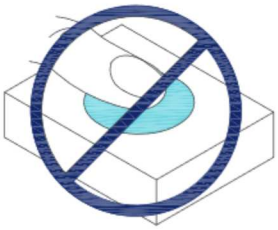

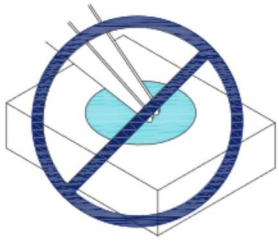

3. Do not stack together assembled PCBs containing exposed LEDs. Impact may scratch the silicone lens or damage the internal circuitry.

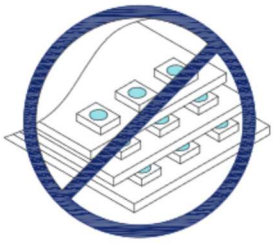

4.1. The inner diameter of the SMD pickup nozzle should not exceed the size of the LED to prevent air leaks.
4.2. A pliable material is suggested for the nozzle tip to avoid scratching or damaging the LED surface during pickup.
4.3. The dimensions of the component must be accurately programmed in the pick-and-place machine to insure precise pickup and avoid damage during production.

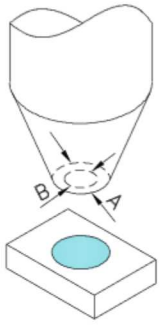

5. As silicone encapsulation is permeable to gases, some corrosive substances such as H_2S might corrode silver plating of leadframe. Special care should be taken if an LED with silicone encapsulation is to be used near such substances.

Kingbright

Selection Guide

Part No.	Dice	Lens Type	Iv (cd) [2] @ 150mA		Φv (lm) [2] @ 150mA		Viewing Angle [1]
			Min.	Typ.	Min.	Typ.	2θ1/2
KA-3529ASEL2Z4S	Hyper Red(AlGaInP)	Water Clear	3.1	4.2	8.6	12	120°

Notes:
1. θ1/2 is the angle from optical centerline where the luminous intensity is 1/2 of the optical peak value.
2. Luminous intensity/ luminous flux: +/-15%.
3. LEDs are binned according to their luminous flux.
4. Luminous intensity/ luminous Flux value is traceable to the CIE127-2007 compliant national standards.

Absolute Maximum Ratings at T_A=25°C

Parameter	Symbol	Value	Unit
Power Dissipation	P_D	450	mW
Junction Temperature [1]	T_J	110	°C
Operating Temperature	Top	-40 To +85	°C
Storage Temperature	Tstg	-40 To +85	°C
DC Forward Current [1]	I_F	150	mA
Peak Forward Current [2]	I_{FM}	350	mA

Notes:
1.Results from mounting on PC board FR4(pad size≥70mm^2), mounted on pc board-metal core PCB is recommend for lowest thermal Resistance.
2.1/10 Duty Cycle, 0.1ms Pulse Width.

Electrical / Optical Characteristics at T_A=25°C

Symbol	Parameter	Device	Typ.	Max.	Units	Test Conditions
λpeak	Peak Wavelength	Hyper Red	640		nm	I_F=150mA
λD [1]	Dominant Wavelength	Hyper Red	625		nm	I_F=150mA
Δλ1/2	Spectral Line Half-width	Hyper Red	20		nm	I_F=150mA
C	Capacitance	Hyper Red	27		pF	V_F=0V;f=1MHz
V_F [2]	Forward Voltage	Hyper Red	2.5	3.0	V	I_F=150mA
I_R	Reverse Current	Hyper Red		10	uA	V_R = 5V

Notes:
1.Wavelength: +/-1nm.
2. Forward Voltage: +/-0.1V.
3.Wavelength value is traceable to the CIE127-2007 compliant national standards.

Hyper Red **KA-3529ASEL2Z4S**

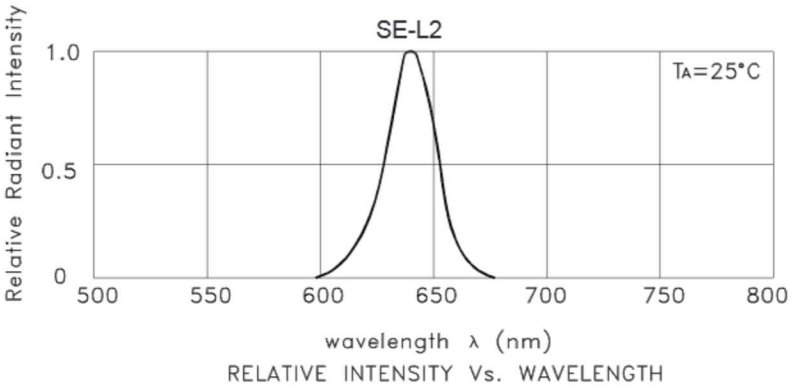

RELATIVE INTENSITY Vs. WAVELENGTH

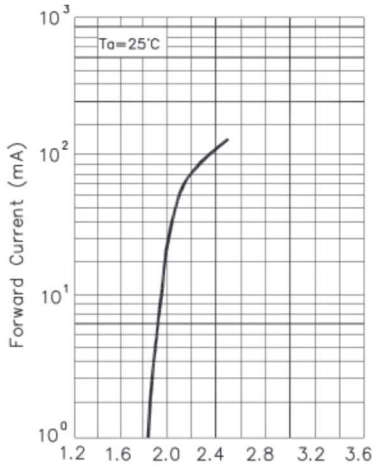

FORWARD CURRENT Vs. FORWARD VOLTAGE

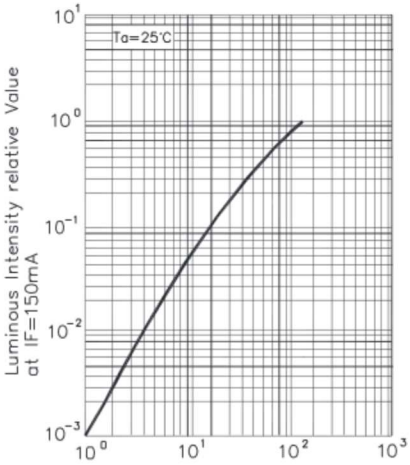

LUMINOUS INTENSITY Vs. FORWARD CURRENT

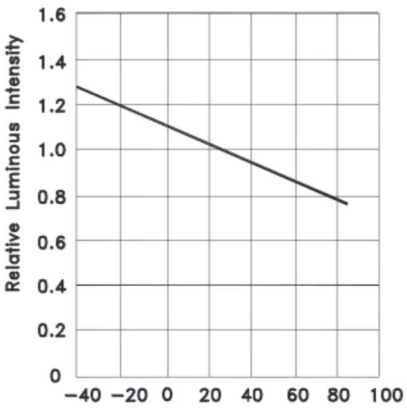

LUMINOUS INTENSITY VS. AMBIENT TEMPERATURE

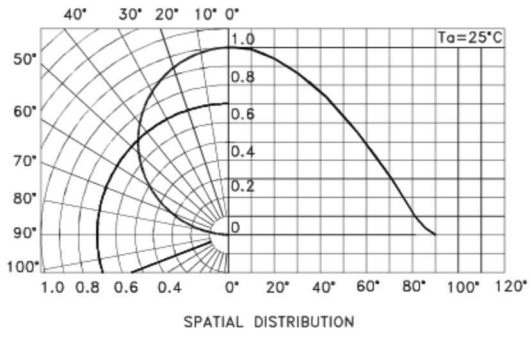

KA-3529ASEL2Z4S

Reflow soldering is recommended and the soldering profile is shown below.
Other soldering methods are not recommended as they might cause damage to the product.

Reflow Soldering Profile For Lead-free SMT Process.

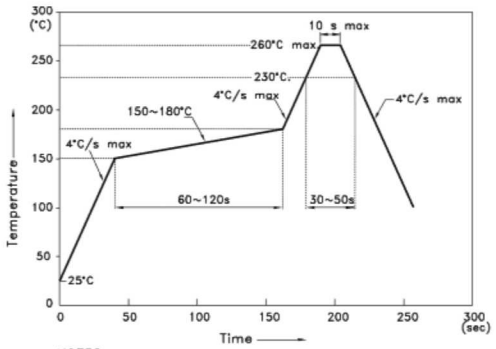

NOTES:
1. We recommend the reflow temperature 245°C(+/-5°C).The maximum soldering temperature should be limited to 260°C.
2. Don't cause stress to the epoxy resin while it is exposed to high temperature.
3. Number of reflow process shall be 2 times or less.

Reel Dimension

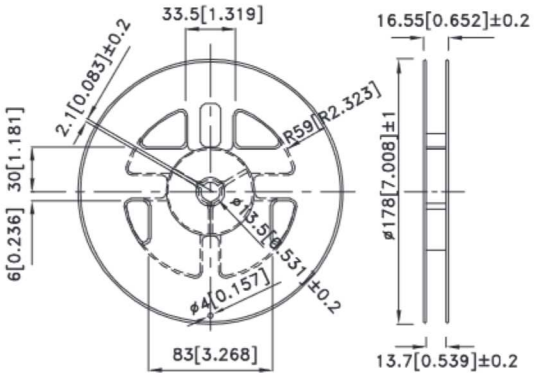

Recommended Soldering Pattern
(Units : mm; Tolerance: ± 0.1)

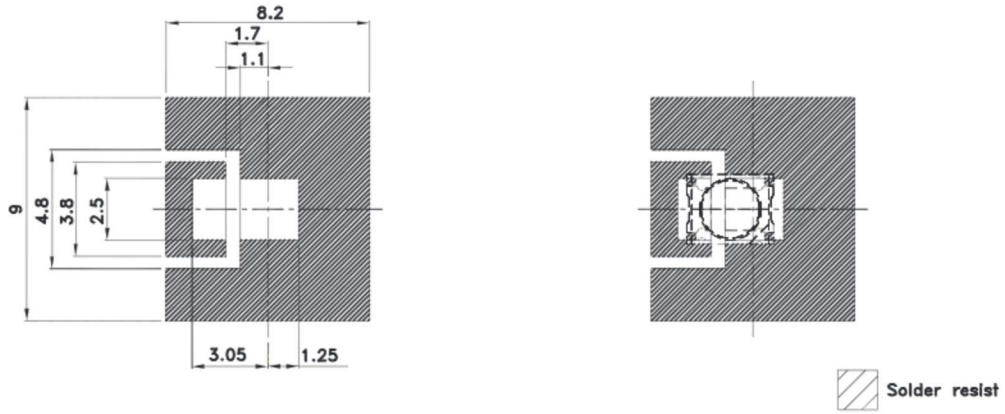

Tape Specifications
(Units : mm)

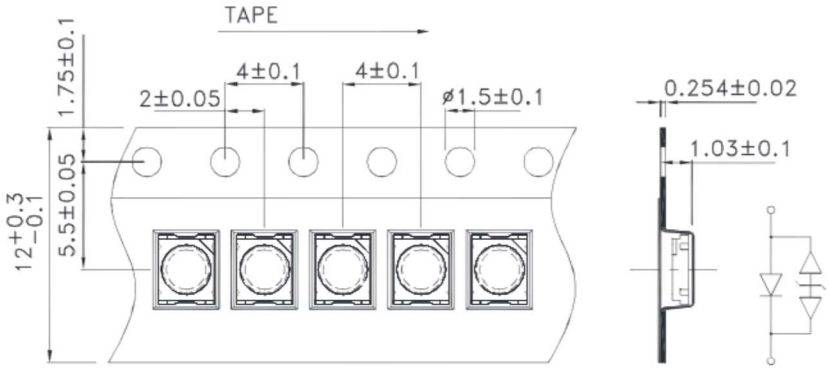

PACKING & LABEL SPECIFICATIONS KA-3529ASEL2Z4S

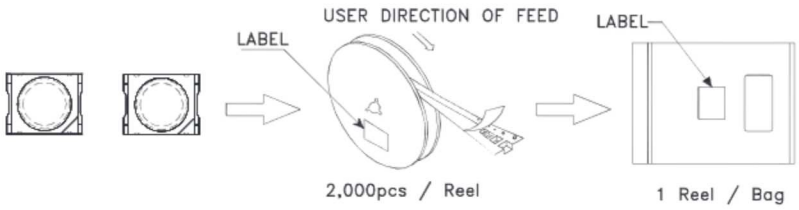

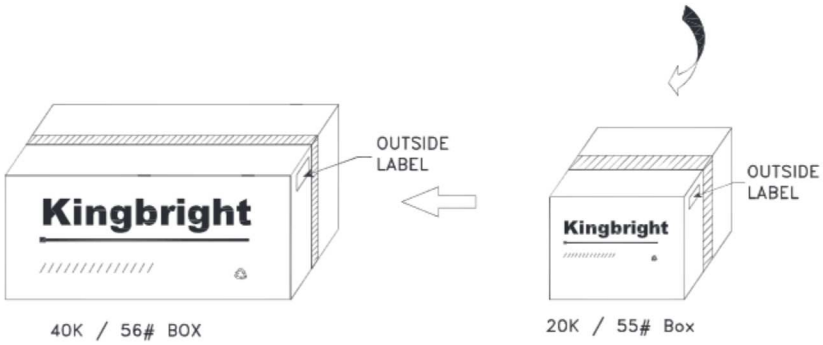



Terms and conditions for the usage of this document

1. The information included in this document reflects representative usage scenarios and is intended for technical reference only.
2. The part number, type, and specifications mentioned in this document are subject to future change and improvement without notice. Before production usage customer should refer to the latest datasheet for the updated specifications.
3. When using the products referenced in this document, please make sure the product is being operated within the environmental and electrical limits specified in the datasheet. If customer usage exceeds the specified limits, Kingbright will not be responsible for any subsequent issues.
4. The information in this document applies to typical usage in consumer electronics applications. If customer's application has special reliability requirements or have life-threatening liabilities, such as automotive or medical usage, please consult with Kingbright representative for further assistance.
5. The contents and information of this document may not be reproduced or re-transmitted without permission by Kingbright.
6. All design applications should refer to Kingbright application notes available at http://www.kingbright.com/application_notes