Pushing Performance
Since 1945

DIN-Signal C064MS-3,0C1-2-NFF

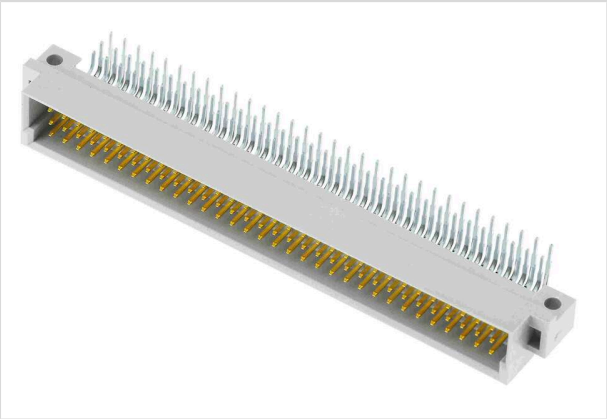

Image is for illustration purposes only. Please refer to product description.

Part number	09 03 164 6921 222
Specification	DIN-Signal C064MS-3,0C1-2-NFF
HARTING eCatalogue	https://harting.com/09031646921222

Identification

Category	Connectors
Series	DIN 41612
Identification	Type C
Element	Male connector
Description of the contact	Angled

Version

Termination method	Wave soldering termination
Connection type	Motherboard to daughtercard Extender card PCB to cable
Number of contacts	64
Contact configuration	Rows a and c, positions 1, 2, ... , 31, 32
Coding	Coding with loss of contacts Side coding
PCB fixing	With fixing flange

Technical characteristics

Contact rows	3
Contact spacing (termination side)	2.54 mm
Contact spacing (mating side)	2.54 mm
Rated current	2 A
Rated current	Rated current measured at 20 °C, see derating curve for details
Clearance distance	≥1.2 mm

HARTING Electronics GmbH | Marienwerderstraße 3 | 32339 Espelkamp | Germany
Phone +49 5772 47-97200 | electronics@HARTING.com | www.HARTING.com

Pushing Performance
Since 1945

Technical characteristics

Creepage distance	≥1.2 mm
Insulation resistance	$>10^{11}$ Ω
Contact resistance	≤20 mΩ
Limiting temperature	-55 ... +125 °C
Insertion force	≤60 N
Withdrawal force	≤40 N
Performance level	2 acc. to IEC 60603-2
Mating cycles	≥400
Test voltage $U_{r.m.s.}$	1 kV
Isolation group	II (400 ≤ CTI < 600)
Hot plugging	No

Material properties

Material (insert)	Thermoplastic resin, glass-fibre filled
Colour (insert)	RAL 7035 (light grey)
Material (contacts)	Copper alloy
Surface (contacts)	Au over NiP over Ni Mating side Sn over Ni Termination side
Material flammability class acc. to UL 94	V-0
RoHS	compliant
ELV status	compliant
China RoHS	e
REACH Annex XVII substances	Not contained
REACH ANNEX XIV substances	Not contained
REACH SVHC substances	Not contained
California Proposition 65 substances	Yes
California Proposition 65 substances	Lead Nickel

Specifications and approvals

Specifications	IEC 60603-2
Railway classification	F1/I2 acc. to NFF 16-101/102

HARTING Electronics GmbH | Marienwerderstraße 3 | 32339 Espelkamp | Germany
Phone +49 5772 47-97200 | electronics@HARTING.com | www.HARTING.com

Pushing Performance
Since 1945

Commercial data

Packaging size	20
Net weight	12.6 g
Country of origin	Germany
European customs tariff number	85366990
GTIN	5713140005228
eCl@ss	27460201 PCB connector (board connector)
ETIM	EC002637
UNSPSC 24.0	39121415

Current carrying capacity

The current carrying capacity of the connectors is limited by the thermal load capability of the contact element material including the connections and the insulating parts. The derating curve is therefore valid for currents which flow constantly (non-intermittent) through each contact element of the connector evenly, without exceeding the allowed maximum temperature.
Measuring and testing techniques acc. to IEC 60512-5-2

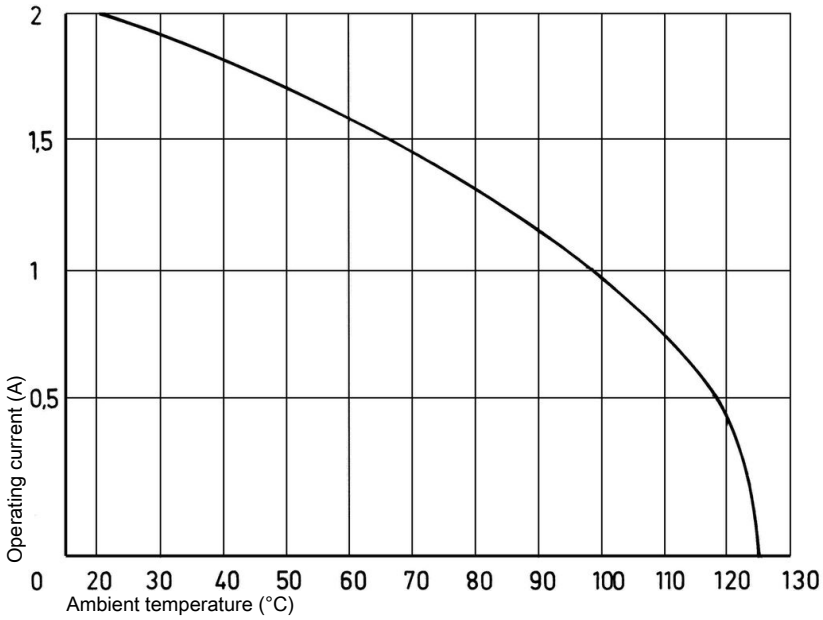

HARTING Electronics GmbH | Marienwerderstraße 3 | 32339 Espelkamp | Germany
Phone +49 5772 47-97200 | electronics@HARTING.com | www.HARTING.com

Pushing Performance
Since 1945

Side coding
(without loss of contact)



To avoid cross-plugging of adjacent connectors a coding system is required.
This coding system is an integral part of both male and female connectors. A comb with 12 coding pins, which is supplied under part number 09 02 000 9928, allows over 900 coding variations. The pins are to be locked into the male and female connectors.
These coding bars can be screwed on the top side of angled male and female connectors. They are alternatives to the male and female connectors with pre-assembled or splashed coding bars. As far as available we recommend the connectors with pre-assembled or splashed coding bar.

Coding with loss of contacts
To avoid cross-plugging of adjacent connectors a coding system is required.
The coding is achieved by means of a code pin which is inserted into the selected chamber of the female connector (the contact cavity must be filled with a female contact!).
The opposite male contact must be removed with the help of the specially designed tool. It’s recommended to use a number of code pins in relation to the total number of contacts per connector: 3 pins for 64 contacts, 7 pins for 160 contacts
Coding pin 09 02 000 9901
Removal tool for male contacts 09 99 000 0133

Cross section of solder termination

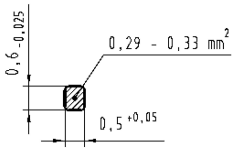

HARTING Electronics GmbH | Marienwerderstraße 3 | 32339 Espelkamp | Germany
Phone +49 5772 47-97200 | electronics@HARTING.com | www.HARTING.com

Pushing Performance
Since 1945

Soldering instructions

The connectors should be protected when being soldered. Otherwise, they might become contaminated as a result of soldering operations or deformed as a result of overheating.
1) For prototypes and short runs protect the connectors with an industrial adhesive tape, e.g. Tesaband 4331 (www.tesa.de). Cover the underside of the connector moulding and the adjacent parts of the pcb as well as the open sides of the connector. This will prevent heat and gases of the soldering apparatus from damaging the connector. About 140 + 5 mm of the tape should suffice.
2) For large series a jig is recommended. Its protective cover with a fast action mechanical locking devie shields the connectors from gas and heat generated by the soldering apparatus. As an additional protection a foil can be used for covering the parts that should not be soldered.
3) For prototypes and short runs the protection described under point 1) can be replaced by a solder protection cap. This cap can be ordered under the part no. 09 02 000 9935.

Mating conditions

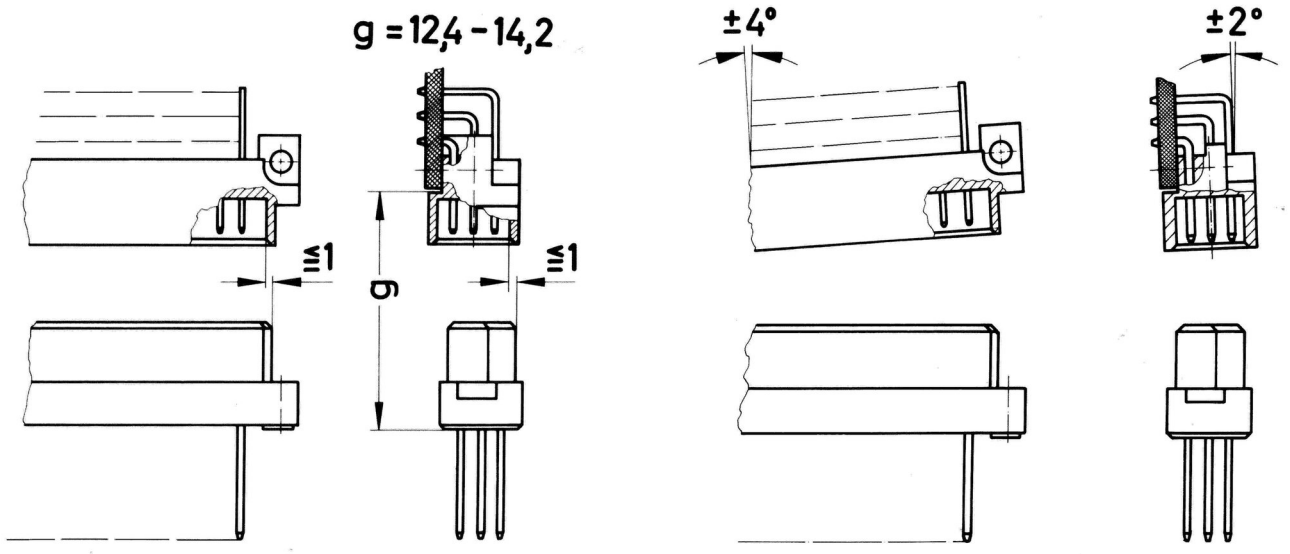

To ensure reliable connections and prevent unnecessary damage, please refer to the application data diagrams. These recommendations are set out in IEC 60603-2.
The connectors should not be coupled and decoupled under electrical load.

HARTING Electronics GmbH | Marienwerderstraße 3 | 32339 Espelkamp | Germany
Phone +49 5772 47-97200 | electronics@HARTING.com | www.HARTING.com