Pushing Performance
Since 1945

DIN-Signal M024MS-3,0C1-1



Image is for illustration purposes only. Please refer to product description.

Part number	09 03 124 2901
Specification	DIN-Signal M024MS-3,0C1-1
HARTING eCatalogue	https://harting.com/09031242901

Identification

Category	Connectors
Series	DIN 41612
Identification	Type M
Element	Male connector
Description of the contact	Angled
Features	Rated current of special contacts: see data sheet of the selected contacts

Version

Termination method	Wave soldering termination
Connection type	Motherboard to daughtercard Extender card PCB to cable
Number of contacts	32
Number of signal contacts	24
Number of special contacts	8
Contact configuration	Rows a, b and c, positions 13, 14, ... , 19, 20
Coding	Coding with loss of contacts
PCB fixing	With fixing flange

Technical characteristics

Contact rows	3
Contact spacing (termination side)	2.54 mm 7.62 mm

HARTING Electronics GmbH | Marienwerderstraße 3 | 32339 Espelkamp | Germany
Phone +49 5772 47-97200 | electronics@HARTING.com | www.HARTING.com

Pushing Performance
Since 1945

Technical characteristics

Contact spacing (mating side)	2.54 mm 7.62 mm
Rated current	2 A
Rated current	Rated current measured at 20 °C, see derating curve for details
Clearance distance	≥1.2 mm
Creepage distance	≥1.2 mm
Insulation resistance	$>10^{12}$ Ω
Contact resistance	≤20 mΩ
Limiting temperature	-55 ... +125 °C
Insertion force	≤23 N
Withdrawal force	≤15 N
Performance level	1 acc. to IEC 60603-2
Mating cycles	≥500
Test voltage $U_{r.m.s.}$	1 kV
Isolation group	IIIa (175 ≤ CTI < 400)
Hot plugging	No

Material properties

Material (insert)	Thermoplastic resin, glass-fibre filled
Colour (insert)	RAL 7032 (pebble grey)
Material (contacts)	Copper alloy
Surface (contacts)	Au over NiP over Ni Mating side Sn over Ni Termination side
Material flammability class acc. to UL 94	V-0
RoHS	compliant
ELV status	compliant
China RoHS	e
REACH Annex XVII substances	Not contained
REACH ANNEX XIV substances	Not contained
REACH SVHC substances	Not contained
California Proposition 65 substances	Yes
California Proposition 65 substances	Lead Nickel
Fire protection on railway vehicles	EN 45545-2 (2020-08)

HARTING Electronics GmbH | Marienwerderstraße 3 | 32339 Espelkamp | Germany
Phone +49 5772 47-97200 | electronics@HARTING.com | www.HARTING.com

Pushing Performance
Since 1945

Material properties

Requirement set with Hazard Levels	R26

Specifications and approvals

Specifications	IEC 60603-2
UL / CSA	UL 1977 ECBT2.E102079 CSA-C22.2 No. 182.3 ECBT8.E102079
Railway classification	F4/I3 acc. to NFF 16-101/102

Commercial data

Packaging size	20
Net weight	8 g
Country of origin	Germany
European customs tariff number	85366990
GTIN	5713140004603
eCl@ss	27460201 PCB connector (board connector)
ETIM	EC002637
UNSPSC 24.0	39121415

Current carrying capacity

The current carrying capacity of the connectors is limited by the thermal load capability of the contact element material including the connections and the insulating parts. The derating curve is therefore valid for currents which flow constantly (non-intermittent) through each contact element of the connector evenly, without exceeding the allowed maximum temperature.
Measuring and testing techniques acc. to IEC 60512-5-2

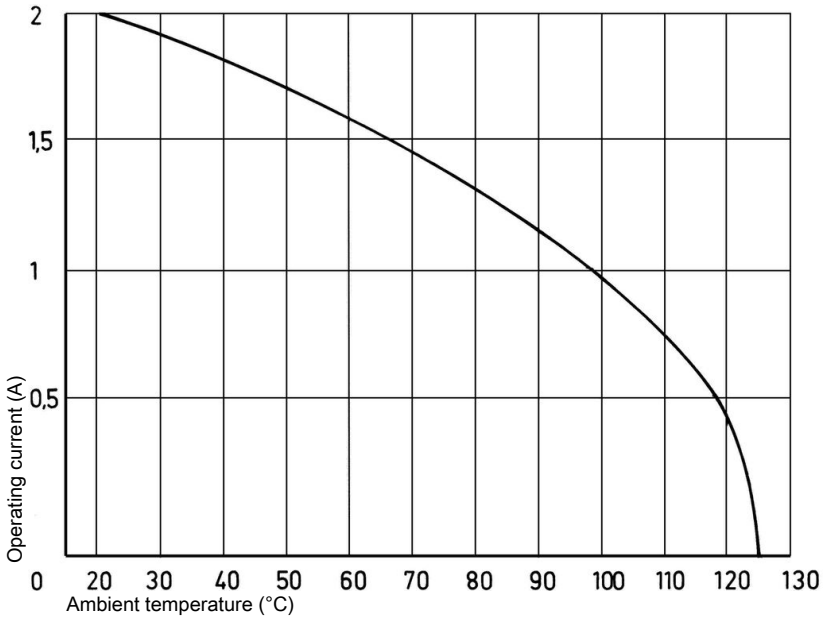

HARTING Electronics GmbH | Marienwerderstraße 3 | 32339 Espelkamp | Germany
Phone +49 5772 47-97200 | electronics@HARTING.com | www.HARTING.com

Pushing Performance
Since 1945

Coding with loss of contacts
To avoid cross-plugging of adjacent connectors a coding system is required.
The coding is achieved by means of a code pin which is inserted into the selected chamber of the female connector (the contact cavity must be filled with a female contact!).
The opposite male contact must be removed with the help of the specially designed tool. It's recommended to use a number of code pins in relation to the total number of contacts per connector: 3 pins for 64 contacts, 7 pins for 160 contacts
Coding pin 09 02 000 9901
Removal tool for male contacts 09 99 000 0133

Soldering instructions

The connectors should be protected when being soldered. Otherwise, they might become contaminated as a result of soldering operations or deformed as a result of overheating.
1) For prototypes and short runs protect the connectors with an industrial adhesive tape, e.g. Tesaband 4331 (www.tesa.de). Cover the underside of the connector moulding and the adjacent parts of the pcb as well as the open sides of the connector. This will prevent heat and gases of the soldering apparatus from damaging the connector. About 140 + 5 mm of the tape should suffice.
2) For large series a jig is recommended. Its protective cover with a fast action mechanical locking devie shields the connectors from gas and heat generated by the soldering apparatus. As an additional protection a foil can be used for covering the parts that should not be soldered.

Mating conditions

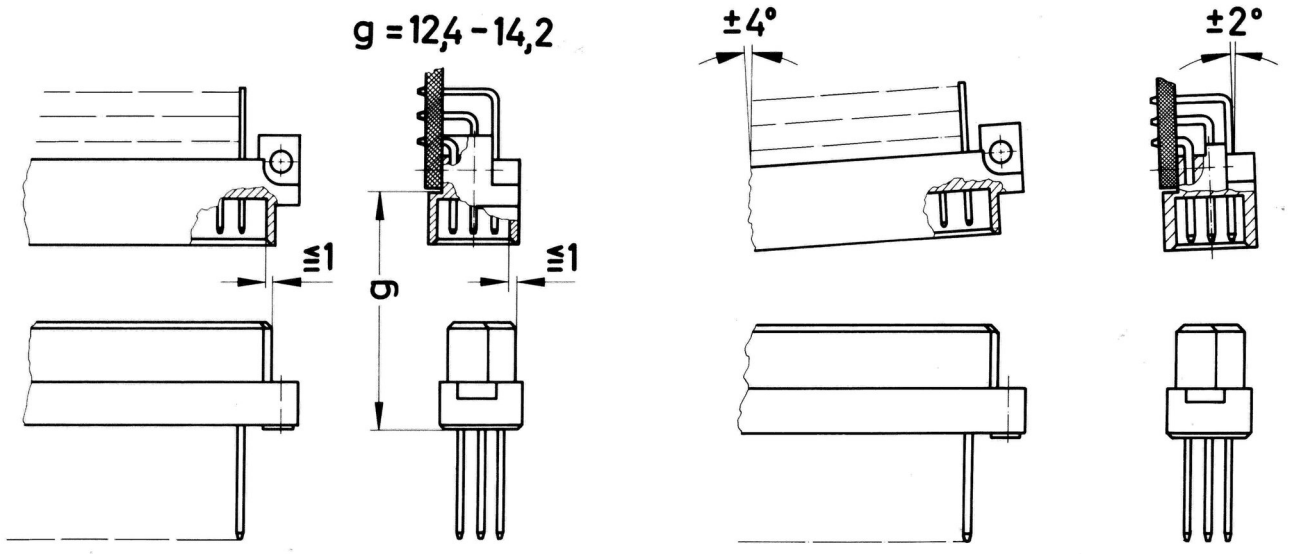

To ensure reliable connections and prevent unnecessary damage, please refer to the application data diagrams. These recommendations are set out in IEC 60603-2.
The connectors should not be coupled and decoupled under electrical load.

HARTING Electronics GmbH | Marienwerderstraße 3 | 32339 Espelkamp | Germany
Phone +49 5772 47-97200 | electronics@HARTING.com | www.HARTING.com