Pushing Performance
Since 1945

DIN-Signal B064FC-B

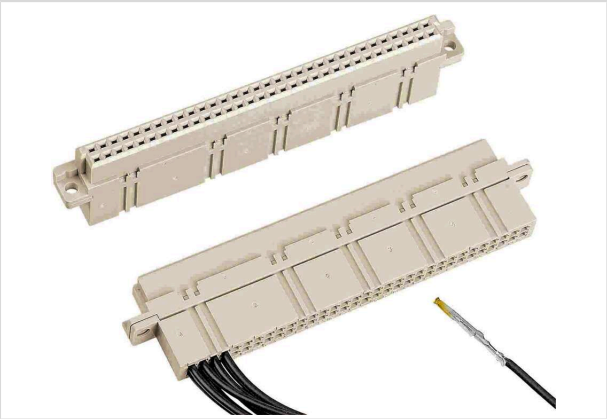

Image is for illustration purposes only. Please refer to product description.

Part number	09 02 064 3214
Specification	DIN-Signal B064FC-B
HARTING eCatalogue	https://harting.com/09020643214

Identification

Category	Connectors
Series	DIN 41612
Identification	Type B
Element	Female connector

Version

Termination method	Crimp termination
Connection type	PCB to cable
Number of contacts	64
Coding	Coding with loss of contacts
PCB fixing	With fixing flange
Details	Please order crimp contacts separately.

Technical characteristics

Contact rows	2
Contact spacing (termination side)	2.54 mm
Contact spacing (mating side)	2.54 mm
Rated current	Rated current measured at 20 °C, see derating curve for details
Clearance distance	≥1.2 mm
Creepage distance	≥1.2 mm
Insulation resistance	$>10^{12}$ Ω
Contact resistance	≤20 mΩ
Limiting temperature	-55 ... +125 °C

HARTING Electronics GmbH | Marienwerderstraße 3 | 32339 Espelkamp | Germany
Phone +49 5772 47-97200 | electronics@HARTING.com | www.HARTING.com

Pushing Performance
Since 1945

Technical characteristics

Insertion force	≤60 N
Withdrawal force	≤40 N
Test voltage $U_{r.m.s.}$	1 kV (contact-contact) 1.55 kV (contact-ground)
Isolation group	IIIa (175 ≤ CTI < 400)
Hot plugging	No

Material properties

Material (insert)	Thermoplastic resin, glass-fibre filled
Colour (insert)	RAL 7032 (pebble grey)
Material flammability class acc. to UL 94	V-0
RoHS	compliant
ELV status	compliant
China RoHS	e
REACH Annex XVII substances	Not contained
REACH ANNEX XIV substances	Not contained
REACH SVHC substances	Not contained

Specifications and approvals

Specifications	IEC 60603-2
UL / CSA	UL 1977 ECBT2.E102079 CSA-C22.2 No. 182.3 ECBT8.E102079
Railway classification	F1/I2 acc. to NFF 16-101/102

Commercial data

Packaging size	200
Net weight	10 g
Country of origin	Germany
European customs tariff number	85366990
GTIN	5713140003217
eCl@ss	27460201 PCB connector (board connector)
ETIM	EC002637
UNSPSC 24.0	39121415

HARTING Electronics GmbH | Marienwerderstraße 3 | 32339 Espelkamp | Germany
Phone +49 5772 47-97200 | electronics@HARTING.com | www.HARTING.com

Pushing Performance
Since 1945

Current carrying capacity

The current carrying capacity of the connectors is limited by the thermal load capability of the contact element material including the connections and the insulating parts. The derating curve is therefore valid for currents which flow constantly (non-intermittent) through each contact element of the connector evenly, without exceeding the allowed maximum temperature.
Measuring and testing techniques acc. to IEC 60512-5-2

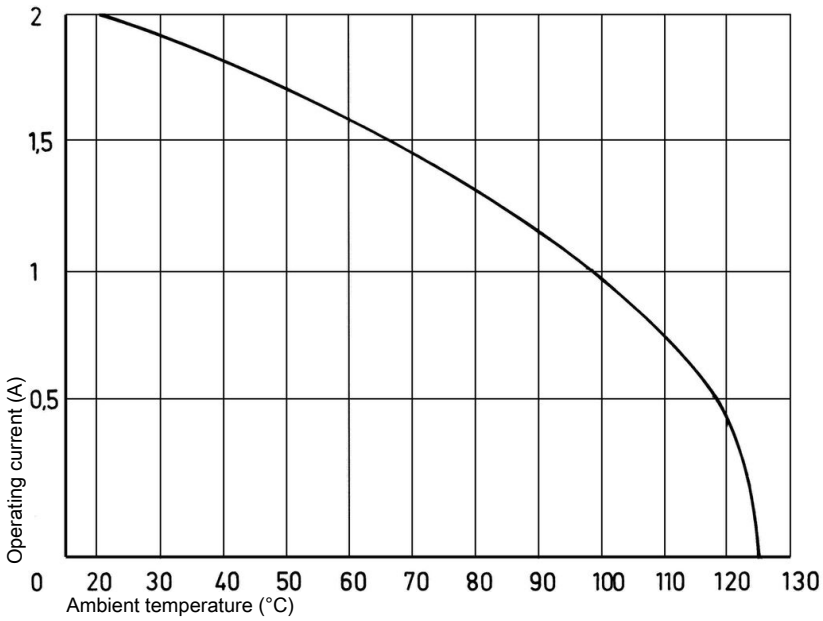

Coding with loss of contacts
To avoid cross-plugging of adjacent connectors a coding system is required.
The coding is achieved by means of a code pin which is inserted into the selected chamber of the female connector (the contact cavity must be filled with a female contact!).
The opposite male contact must be removed with the help of the specially designed tool. It’s recommended to use a number of code pins in relation to the total number of contacts per connector: 3 pins for 64 contacts, 7 pins for 160 contacts
Coding pin 09 02 000 9901
Removal tool for male contacts 09 99 000 0133

HARTING Electronics GmbH | Marienwerderstraße 3 | 32339 Espelkamp | Germany
Phone +49 5772 47-97200 | electronics@HARTING.com | www.HARTING.com

Pushing Performance
Since 1945

Installation of crimp contacts

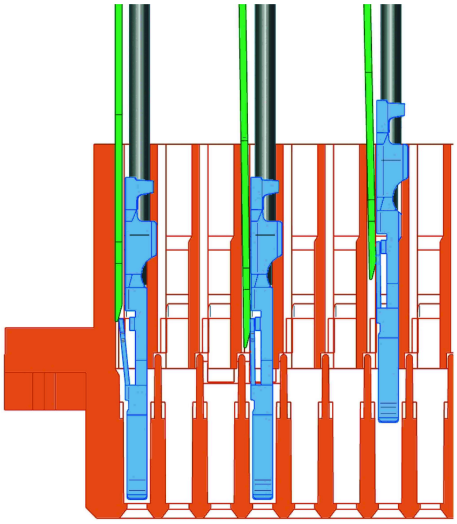

Fitting the crimp contacts:
After crimping the wires onto the contacts with the help of a crimping tool or an automatic crimping machine the contacts should be correctly oriented and inserted into the cavities of the connector moulding in the required configuration. They snap into position and are firmly held in place. A light pull on the wire assures the correct tensile strength of the contact. When using stranded wires with a gauge below 0.37 mm^2 an insertion tool is necessary.Insertion tool part number: 09 99 000 0100
Insertion tool part number: 09 99 000 0100
Removing the crimp contacts:
The removal tool is inserted into a slot on the side of the respective crimp cavity. This action compresses the contact retaining spring therefore the contact can then be easily withdrawn using a light pull on the wire. This action will cause no damange to the contact / wire which can be repositioned / refitted as necessary. The drawing demonstrates the crimp removal procedure (max. 5x).
Removal tool part number: 09 99 000 0101

HARTING Electronics GmbH | Marienwerderstraße 3 | 32339 Espelkamp | Germany
Phone +49 5772 47-97200 | electronics@HARTING.com | www.HARTING.com

Pushing Performance
Since 1945

Mating conditions

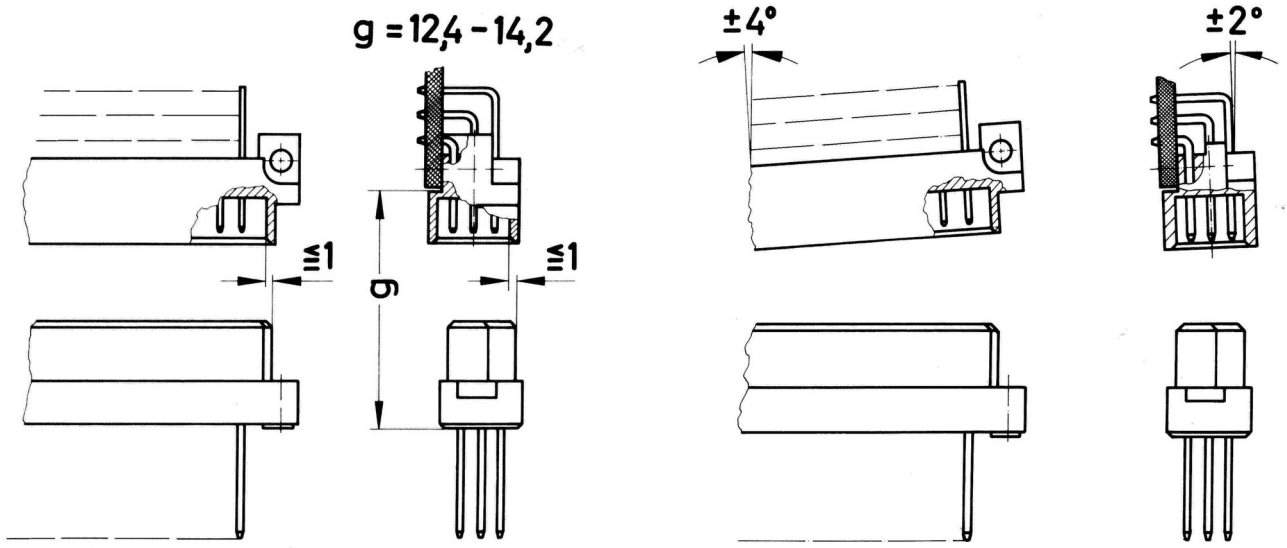

To ensure reliable connections and prevent unnecessary damage, please refer to the application data diagrams. These recommendations are set out in IEC 60603-2.
The connectors should not be coupled and decoupled under electrical load.

HARTING Electronics GmbH | Marienwerderstraße 3 | 32339 Espelkamp | Germany
Phone +49 5772 47-97200 | electronics@HARTING.com | www.HARTING.com