Pushing Performance
Since 1945

Griffblech Han 24B

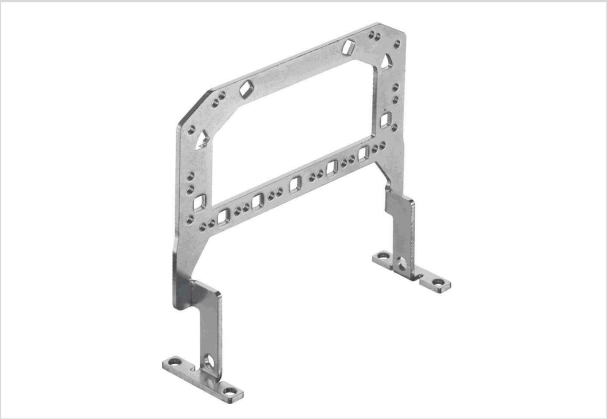

Image is for illustration purposes only. Please refer to product description.

Part number	09 00 024 5601
Specification	Griffblech Han 24B
HARTING eCatalogue	https://harting.com/09000245601

Identification

Category	Accessories
Type of accessory	Grip frame

Version

Size	24 B
Details	Can only be used with screw adapter!

Material properties

Material (accessories)	Metal
Surface (accessories)	Zinc plated
RoHS	compliant
ELV status	compliant
China RoHS	e
REACH Annex XVII substances	Not contained
REACH ANNEX XIV substances	Not contained
REACH SVHC substances	Not contained
California Proposition 65 substances	Yes
California Proposition 65 substances	Nickel

Commercial data

Packaging size	1
Net weight	70 g
Country of origin	Germany

HARTING Electric Stiftung & Co. KG | Wilhelm-Harting-Straße 1 | 32339 Espelkamp | Germany
Phone +49 5772 47-97100 | electric@HARTING.com | www.HARTING.com

Pushing Performance
Since 1945

Commercial data

European customs tariff number	85366990
GTIN	5713140002883
eCl@ss	27440392 Connector (accessories)
ETIM	EC002939
UNSPSC 24.0	39121400

HARTING Electric Stiftung & Co. KG | Wilhelm-Harting-Straße 1 | 32339 Espelkamp | Germany
Phone +49 5772 47-97100 | electric@HARTING.com | www.HARTING.com