Pushing Performance
Since 1945

har-modular D8 data module male angled



Image is for illustration purposes only. Please refer to product description.

Part number	02 51 908 1501
Specification	har-modular D8 data module male angled
HARTING eCatalogue	https://harting.com/02519081501

Identification

Category	Connectors
Series	har-modular®
Element	Male connector
Description of the contact	Angled

Version

Width of the module	15.24 mm
Termination method	Solder termination
Shielding	Fully shielded, 360° shielding contact
Connection type	Motherboard to daughtercard
Number of contacts	8
Contact configuration	r+t 1,2,3,4
Termination length	2.9 mm

Technical characteristics

Transmission characteristics	40GBASE-KR4 Ethernet
	100GBASE-KR4 Ethernet
	PCIe Gen 2
	PCIe Gen 3
	PCIe Gen 4
	USB 3.0
	USB 3.1
	Hypertransport 3
	SAS 2.0
	SAS 3.0
	Infiniband FDR
	SATA 3.2

HARTING Electronics GmbH | Marienwerderstraße 3 | 32339 Espelkamp | Germany
Phone +49 5772 47-97200 | electronics@HARTING.com | www.HARTING.com

Pushing Performance
Since 1945

Technical characteristics

Data rate	10 Mbit/s 100 Mbit/s 1 Gbit/s 5 Gbit/s 10 Gbit/s 25 Gbit/s
Clearance distance	1.2 mm in the module
Creepage distance	1.2 mm in the module
Insulation resistance	>10^{11} Ω
Contact resistance	<20 mΩ
Shielding resistance	<100 mΩ
Impedance differential	100 Ω
Limiting temperature	-55 ... +125 °C (during reflow soldering max. +240 °C for 15 s)
Insertion force	40 N
Withdrawal force	40 N
Performance level	1
Mating cycles	≥500
Hot plugging	No

Material properties

Material (insert)	Polyamide (PA)
Colour (insert)	Black
Material (contacts)	Copper alloy
Surface (contacts)	Noble metal over Pd/Ni over Ni Mating side Sn over Ni Termination side Ni Mating side (shielding) Sn over Ni Termination side (shielding)
Material flammability class acc. to UL 94	V-0
RoHS	compliant
ELV status	compliant
China RoHS	e
REACH Annex XVII substances	Not contained
REACH ANNEX XIV substances	Not contained
REACH SVHC substances	Not contained
California Proposition 65 substances	Not contained

HARTING Electronics GmbH | Marienwerderstraße 3 | 32339 Espelkamp | Germany
Phone +49 5772 47-97200 | electronics@HARTING.com | www.HARTING.com

Pushing Performance
Since 1945

Material properties

Requirement set with Hazard Levels	R26

Specifications and approvals

Railway classification	F1/I2 acc. to NFF 16-101/102

Commercial data

Packaging size	13
Net weight	5.668 g
Country of origin	Romania
European customs tariff number	85366990
GTIN	5713140573543
eCl@ss	27460201 PCB connector (board connector)
ETIM	EC002637
UNSPSC 24.0	39121415

Cross section of solder termination

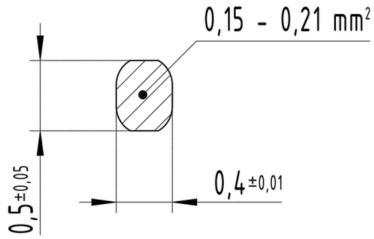

8x Contacts

Cross section of solder termination

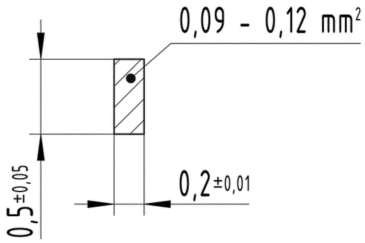

24x Shielding
In the middle positions of the board layout, 2 connections from neighbouring shieldings are mounted in a PCB hole.

HARTING Electronics GmbH | Marienwerderstraße 3 | 32339 Espelkamp | Germany
Phone +49 5772 47-97200 | electronics@HARTING.com | www.HARTING.com

Pushing Performance
Since 1945

Quantity of solder paste

Before the components are assembled, solder paste must be applied to all the solder pads (for connecting surface-mount components) and the plated through holes. To ensure that the plated through holes are completely filled, significantly more solder paste must be applied than traditional solder pads on the pcb surface. There are numerous calculation methods available which are complicatd to apply. The following rule of thumb has proved valuable in practice.
Required volume of paste = 2x (Volume of plated through hole - Volume of the connector termination in the hole)
Comment: the multiplier ″2″ compensates for solder paste shrinkage during soldering. For this purpose, it was assumed that 50% of the paste consists of the actual solder, the other 50% being soldering aids.

Soldering instructions

THR (ThroughHoleReflow) connectors are designed to be used in a reflow oven together with other SMD (SurfaceMountDevice) components. In the process, called as well ″Pin in Hole Intrusive Reflow″, the connectors are inserted into plated through holes in a comparable way to conventional component mounting. All other components can be assembled on the pcb surface.
The length of the connector contacts should be such that they protrude by no more than 1.5 millimetres after insertion to the pcb. Each contact collects solder on its tip as it penetrates the solder paster in the hole. So if the contact is too long, this solder would no longer be able to reflow back into the plated through hole by capillary action during the soldering process, therefore the quality of the soldered connection would suffer as a result.

Soldering instructions

The connectors should be protected when being soldered. Otherwise, they might become contaminated as a result of soldering operations or deformed as a result of overheating.
1) For prototypes and short runs protect the connectors with an industrial adhesive tape, e.g. Tesaband 4331 (www.tesa.de). Cover the underside of the connector moulding and the adjacent parts of the pcb as well as the open sides of the connector. This will prevent heat and gases of the soldering apparatus from damaging the connector. About 140 + 5 mm of the tape should suffice.
2) For large series a jig is recommended. Its protective cover with a fast action mechanical locking devie shields the connectors from gas and heat generated by the soldering apparatus. As an additional protection a foil can be used for covering the parts that should not be soldered.
3) For prototypes and short runs the protection described under point 1) can be replaced by a solder protection cap. This cap can be ordered under the part no. 09 02 000 9935.

HARTING Electronics GmbH | Marienwerderstraße 3 | 32339 Espelkamp | Germany
Phone +49 5772 47-97200 | electronics@HARTING.com | www.HARTING.com

Pushing Performance
Since 1945

Mating conditions

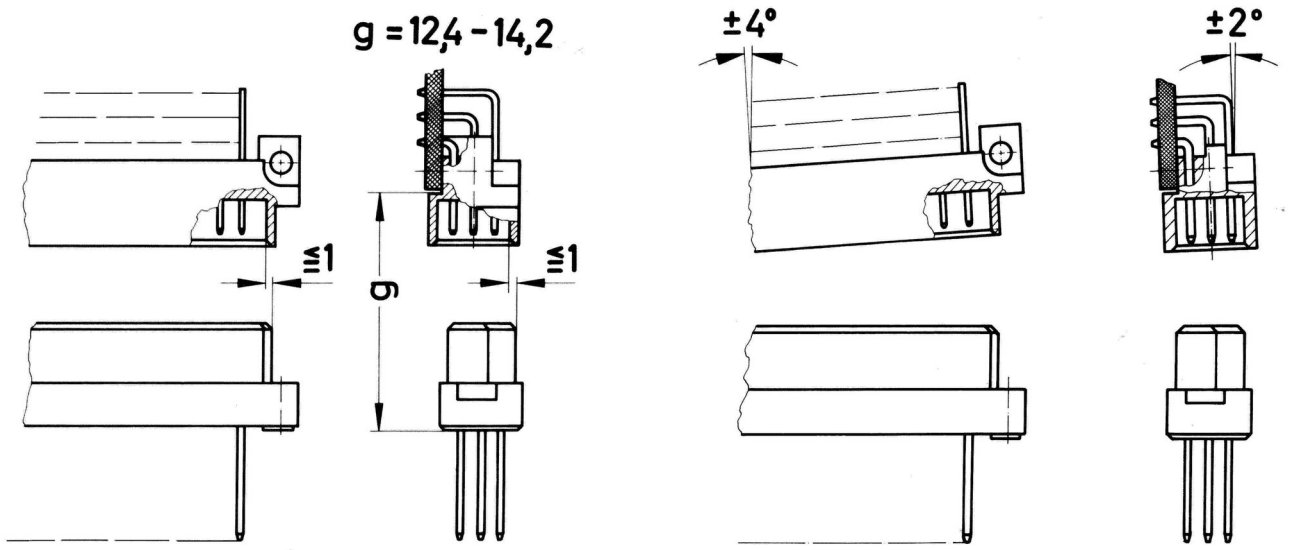

To ensure reliable connections and prevent unnecessary damage, please refer to the application data diagrams. These recommendations are set out in IEC 60603-2.
The connectors should not be coupled and decoupled under electrical load.

har-modular®

Data rate

Protocol	Serial Data Rate / Pair	Single Interface Short Channel	Double Interface Short Channel	Double Interface Long Channel
400GBASE-KR4	56 Gbit/s	not recommended	not recommended	not recommended
100GBASE-KR4	25 Gbit/s	suitable [1]	not recommended	not recommended
40GBASE-KR4	10 Gbit/s	suitable	suitable	suitable [1]
Infiniband HDR	50 Gbit/s	not recommended	not recommended	not recommended
Infiniband EDR	25.8 Gbit/s	not recommended	not recommended	not recommended
Infiniband FDR	14 Gbit/s	suitable [1]	suitable [1]	not recommended
PCIe Gen 4	16 Gbit/s	suitable [1]	suitable [1]	not recommended
PCIe Gen 3	8 Gbit/s	suitable	suitable	suitable
PCIe Gen 2	5 Gbit/s	suitable	suitable	suitable
USB 3.1	5 Gbit/s	suitable	suitable	suitable
USB 3.0	5 Gbit/s	suitable	suitable	suitable
Hypertransport 3	5.2 Gbit/s	suitable	suitable	suitable
SATA 3.2	16 Gbit/s	suitable [1]	suitable [1]	not recommended
SAS 4.0	22.5 Gbit/s	not recommended	not recommended	not recommended
SAS 3.0	12 Gbit/s	suitable [1]	suitable [1]	not recommended
SAS 2.0	6 Gbit/s	suitable	suitable	suitable

[1] using Mid-Performing PCB-Material [2] using High-Performing PCB-Material

The protocol recommendations are based on a set of defined channels. For more information please refer to the reference channel descriptions:
https://d33y5j6752j001.cloudfront.net/asset/201312468866/document_ifd9i1f1bd01t6mk6dr9s45u2u

HARTING Electronics GmbH | Marienwerderstraße 3 | 32339 Espelkamp | Germany
Phone +49 5772 47-97200 | electronics@HARTING.com | www.HARTING.com