Pushing Performance
Since 1945

Male angled for kit connector (A=40,61)

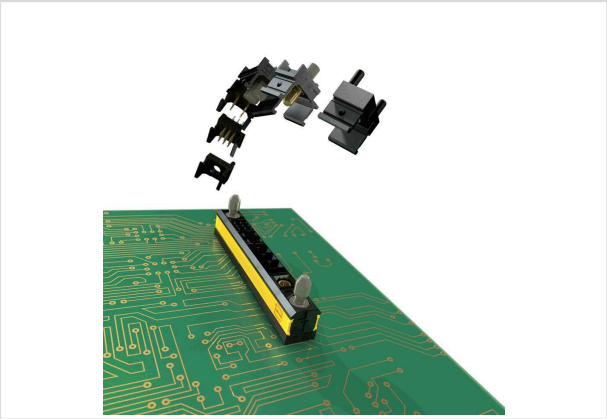

Image is for illustration purposes only. Please refer to product description.

Part number	02 51 000 0002
Specification	Male angled for kit connector (A=40,61)
HARTING eCatalogue	https://harting.com/02510000002

Identification

Category	Connectors
Series	har-modular®
Element	Male connector
Specification	Pre-assembled connector
Description of the contact	Angled

Version

Installed modules	2x 02519000002 https://harting.com/02519000002 1x 02519091101 https://harting.com/02519091101 1x 02519031301 https://harting.com/02519031301
Length	40.61 mm
Termination method	Reflow soldering termination (THR) Wave soldering termination
Connection type	Motherboard to daughtercard

Technical characteristics

Insulation resistance	$>10^{11}$ Ω
Limiting temperature	-55 ... +125 °C (during reflow soldering max. +240 °C for 15 s)
Performance level	1 acc. to IEC 60603-2
Mating cycles	≥500
Isolation group	I (600 ≤ CTI)
Hot plugging	No

HARTING Electronics GmbH | Marienwerderstraße 3 | 32339 Espelkamp | Germany
Phone +49 5772 47-97200 | electronics@HARTING.com | www.HARTING.com

Pushing Performance
Since 1945

Technical characteristics

Moisture Sensitivity Level (MSL)	1 acc. to ECA/IPC/JEDEC J-STD-020D

Material properties

Material (insert)	Polyamide (PA)
Colour (insert)	Black Yellow
Material flammability class acc. to UL 94	V-0
RoHS	compliant
ELV status	compliant
China RoHS	e
REACH Annex XVII substances	Not contained
REACH ANNEX XIV substances	Not contained
REACH SVHC substances	Not contained
California Proposition 65 substances	Not contained

Specifications and approvals

UL / CSA	UL 1977 ECBT2.E102079 CSA-C22.2 No. 182.3 ECBT8.E102079
Railway classification	F1/I2 acc. to NFF 16-101/102

Commercial data

Packaging size	1
Net weight	6.46 g
Country of origin	Romania
European customs tariff number	85366990
GTIN	5713140198104
eCl@ss	27460201 PCB connector (board connector)
ETIM	EC002637
UNSPSC 24.0	39121415

HARTING Electronics GmbH | Marienwerderstraße 3 | 32339 Espelkamp | Germany
Phone +49 5772 47-97200 | electronics@HARTING.com | www.HARTING.com

Pushing Performance
Since 1945

Mating conditions

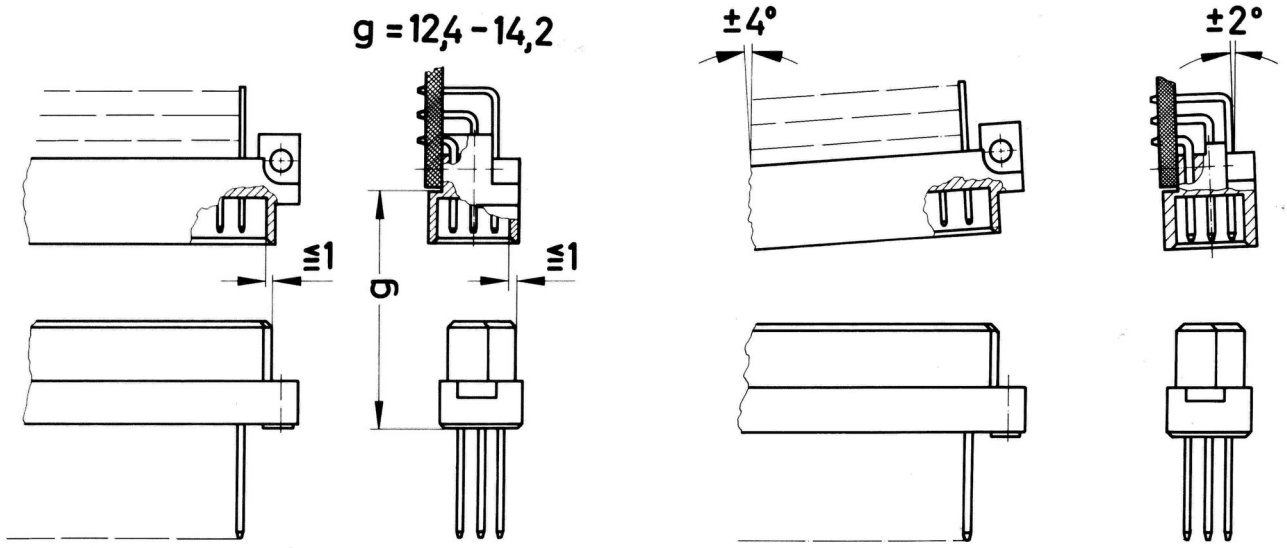

To ensure reliable connections and prevent unnecessary damage, please refer to the application data diagrams. These recommendations are set out in IEC 60603-2.
The connectors should not be coupled and decoupled under electrical load.

HARTING Electronics GmbH | Marienwerderstraße 3 | 32339 Espelkamp | Germany
Phone +49 5772 47-97200 | electronics@HARTING.com | www.HARTING.com